First Edition: 23 October 2018

PARTS LIST

MODEL: eXcellence 680+

PARTS LIST

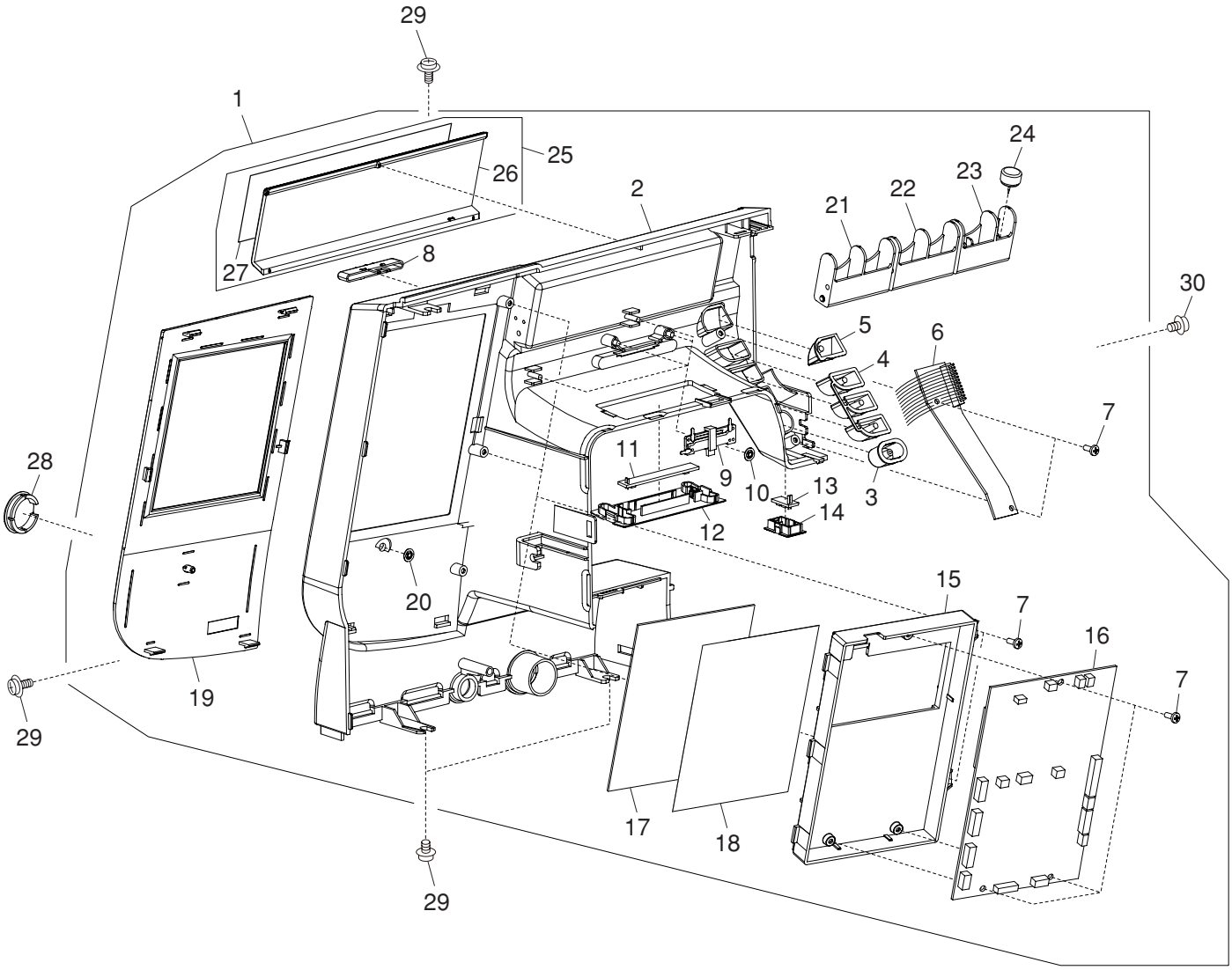
29
1
25
26
24
23
22
21
2
27
8
30
5
6
4
7
28
11
9
10
13
3
14
12
20
15
7
16
7
19
29
17
18
29

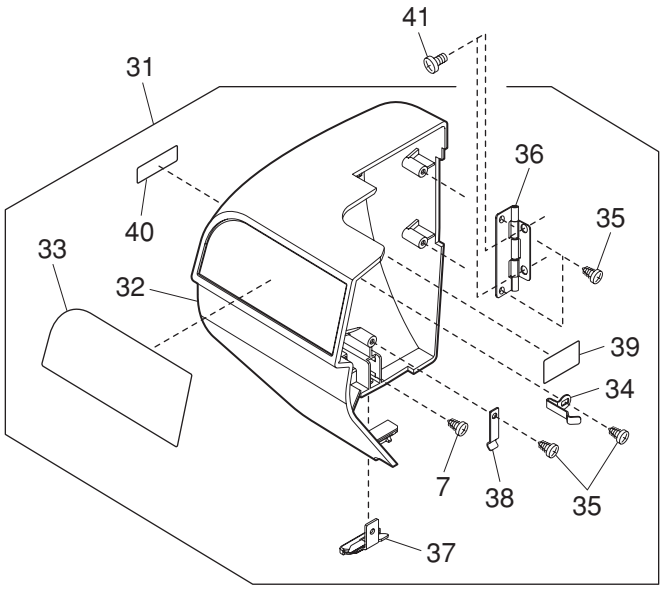
41
31
36
40
35
33
32
39
34
7
38
35
37

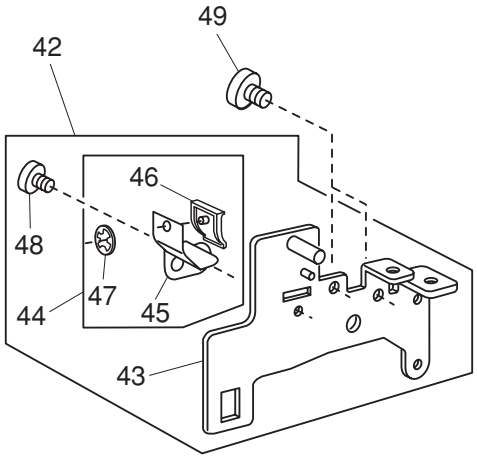
49
42
46
48
47
44
45
43

PARTS LIST

KEY NO.	PARTS NO.	DESCRIPTION
1	863620300	Front cover (unit)
2	861141A02	Front cover
3	858102A03	Start/stop button
4	858208A02	Function button 1
5	858208B02	Function button 2
6	861510001	Printed circuit board F (unit)
7	000120203	Setscrew 3x8 (B)
8	861145001	Speed control slider
9	653507288	Slide volume (unit)
10	000014306	Snap ring CS-3
11	858502310	Printed circuit board L1 (unit)
12	858106000	LED cover 2
13	859525910	Printed circuit board L2 (unit)
14	860167006	Lamp cover 2
15	863034002	Printed circuit board A case
16	858542220	Printed circuit board A (unit)
17	852524000	Touch panel (unit)
18	863022A12	Touch panel sheet
19	863033B01	Ornamental panel
20	000014007	Snap ring CS-4
21	849058A08	Storage compartment 1
22	849058A07	Storage compartment 1
23	849059A04	Storage compartment 2
24	849801004	Circular pivot pin
25	861642405	Storage compartment lid (unit)
26	861143009	Storage compartment lid
27	861144A04	Ornamental plate
28	859216007	Cap
29	000115205	Setscrew TP 4x6
30	000114710	Setscrew TP 3x6
31	863654107	Face plate (unit) (U.S.A.) (Canada)
	863654200	Face plate (unit) (Continental Europe) (Australia)
32	863151A02	Face plate
33	861148A04	Ornamental panel 2
34	850013005	Face plate spring
35	000161206	Setscrew 3x10 (B)
36	851503103	Face plate hinge (unit)
37	832508006	Thread cutter (unit)
38	859233000	Spring
39	100045000	Caution sticker (U.S.A.) (Canada)
40	100517008	Caution sticker (U.S.A.) (Canada)
41	000081119	Setscrew 4x6
42	861612004	Carrying handle supporter (unit)
43	861024003	Carrying handle supporter
44	861613005	Spring (unit)
45	861073007	Spring
46	861074008	Spring cap
47	000017701	Snap ring CS-3.5
48	000101116	Setscrew 3x4
49	000081005	Setscrew 4x8

PARTS LIST

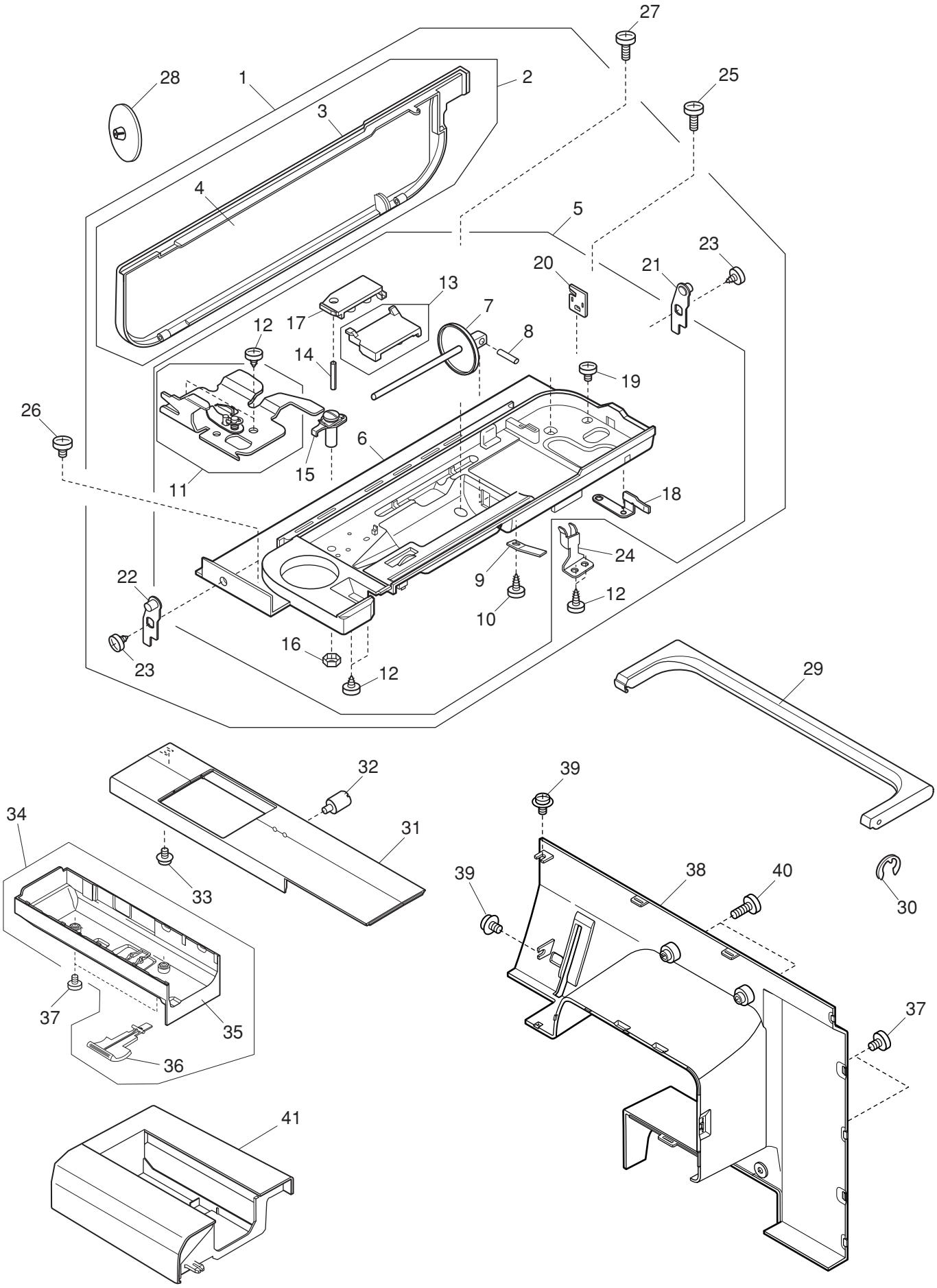
27
28
1
2
25
3
4
5
23
20
21
13
7
12
17
8
14
19
26
6
15
11
18
24
22
9
12
10
16
23
12
29
32
39
34
31
33
39
38
40
30
37
35
37
36
41

PARTS LIST

KEY NO.	PARTS NO.	DESCRIPTION
1	861607604	Top cover (whole unit)
2	861608605	Top cover (unit)
3	861016002	Top cover
4	861017A04	Quick reference chart
5	861609101	Top cover body (unit)
6	861018107	Top cover body
7	859052003	Spool pin
8	822017002	Spool pin shaft
9	822018003	Spool pin spring
10	000107204	Setscrew 3x12 (B)
11	859541004	Thread guide (unit)
12	000120203	Setscrew 3x8 (B)
13	859648002	Thread guide cover (unit)
14	000020202	Spring pin 2x10 (K)
15	830503005	Bobbin winder thread guide (unit)
16	000160102	Adjustable lock nut 4
17	830011001	Bobbin winder thread guide cover
18	861099009	Bobbin winder stopper
19	000101127	Setscrew 3x4
20	830505007	Thread cutter (unit)
21	858023002	Top cover hinge (right)
22	858023105	Top cover hinge (left)
23	000161206	Setscrew 3x10 (B)
24	859137003	Top cover hinge spring (right)
25	000104119	Setscrew 4x20
26	000066705	Setscrew 3x8
27	000170507	Setscrew 4x12
28	822020503	Spool holder
29	861019005	Carrying handle
30	000001609	Snap ring E-5
31	861007103	Free arm cover
32	858165100	Pin
33	000114710	Setscrew TP 3x6
34	861604003	Bed cover (unit)
35	861008001	Bed cover
36	859040008	Lever
37	000081005	Setscrew 4x8
38	861009B03	Rear cover
39	000115205	Setscrew TP 4x6
40	000101806	Setscrew 4x16
41	861501A03	Extension table (unit)

PARTS LIST

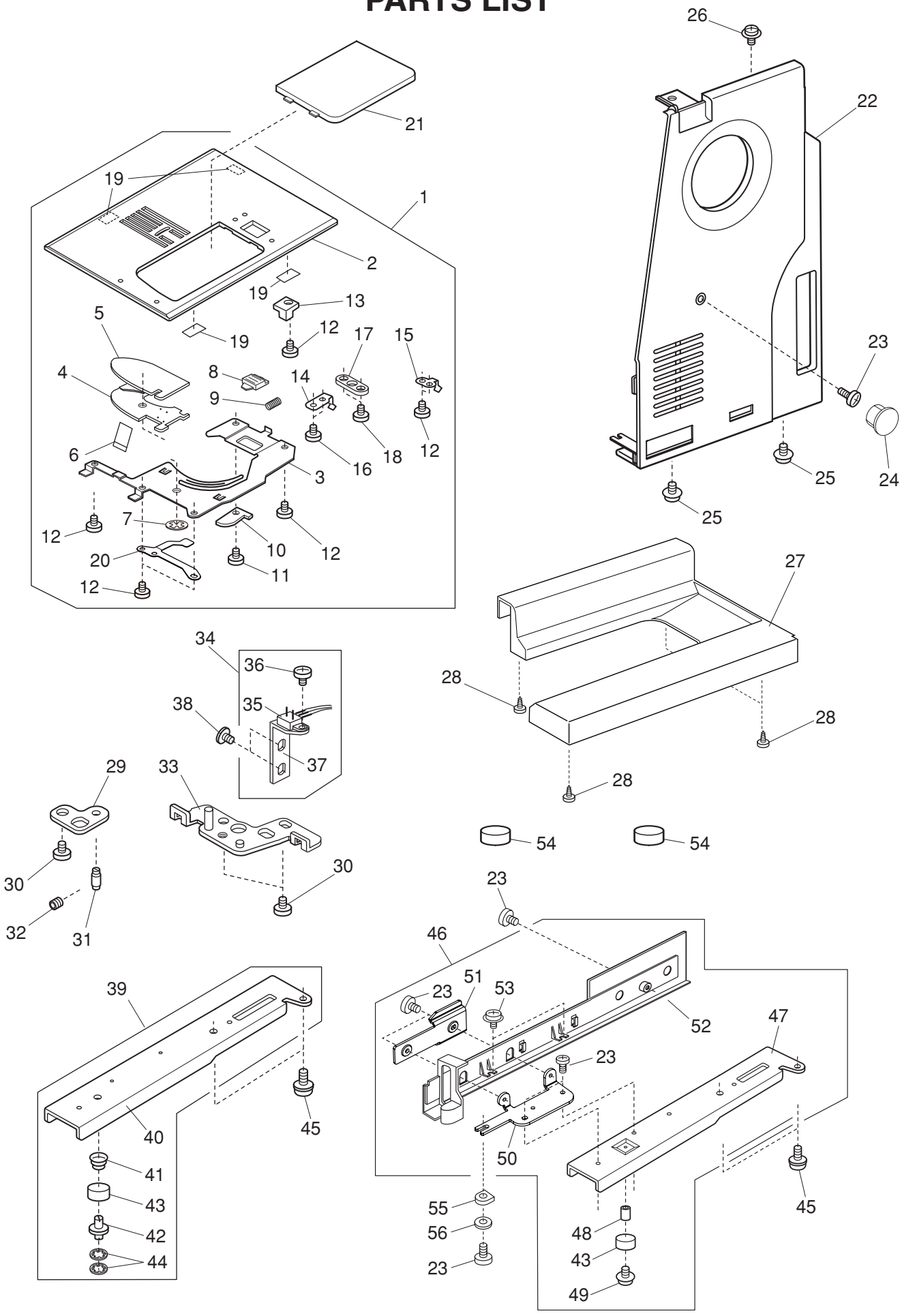
26
22
21
19
1
2
19
13
5
19
12
17
15
4
8
14
9
23
6
16
18
12
3
25
24
25
7
12
10
12
20
11
12
27
34
36
28
38
35
28
37
29
33
28
54
54
30
30
32
31
23
46
39
51
23
53
52
47
23
40
45
50
41
43
55
45
42
56
48
44
43
23
49

PARTS LIST

KEY NO.	PARTS NO.	DESCRIPTION
1	861606016	Needle plate (unit)
2	861013010	Needle plate
3	861014000	Hook cover plate supporter
4	809134005	Hook cover plate supporter base
5	809135006	Guide holder
6	809137008	Cutter
7	000014306	Snap ring CS-3
8	825016000	Hook cover plate release button
9	825017001	Spring
10	809044203	Rotation stopper
11	000097613	Setscrew 2x4
12	820374004	Setscrew 2x2.3
13	859046004	Needle plate sensor block
14	859047016	Spring
15	859245005	Spring 2
16	000169709	Setscrew 2x2.3
17	859271000	Guide plate
18	000102807	Setscrew 2x4
19	859272104	Rubber sheet
20	809184000	Spring
21	809136100	Hook cover plate
22	861146208	Belt cover
23	000081005	Setscrew 4x8
24	745033002	Cap
25	000115205	Setscrew TP 4x6
26	000115009	Setscrew TP 3x8
27	861005019	Base cover
28	000161206	Setscrew 3x10 (B)
29	860003025	Needle plate nut set plate
30	810220106	Setscrew
31	859270009	Needle plate positioning pin
32	000111201	Hexagonal socket screw 4x4
33	859247018	Needle plate adjusting plate
34	859671107	Needle plate sensor (unit)
35	859524104	Switch (unit)
36	755096004	Setscrew
37	859246006	Switch set plate
38	000193001	Setscrew TP 4x6
39	861601000	Arm sole (front cover side) (unit)
40	861002005	Arm sole
41	858162004	Spring
42	820350004	Adjusting screw
43	605074008	Rubber foot
44	000014409	Snap ring CS-8
45	000148403	Setscrew 6x12 (S)
46	863624005	Arm sole (unit)
47	861003006	Arm sole
48	000141107	Bushing
49	000119106	Setscrew TP 4x10
50	863037005	Rail set plate
51	863036004	Rail
52	861006102	Cover
53	000115618	Setscrew TP 4x8
54	647009002	Rubber foot
55	843014004	Nut
56	000070506	Washer 4

PARTS LIST

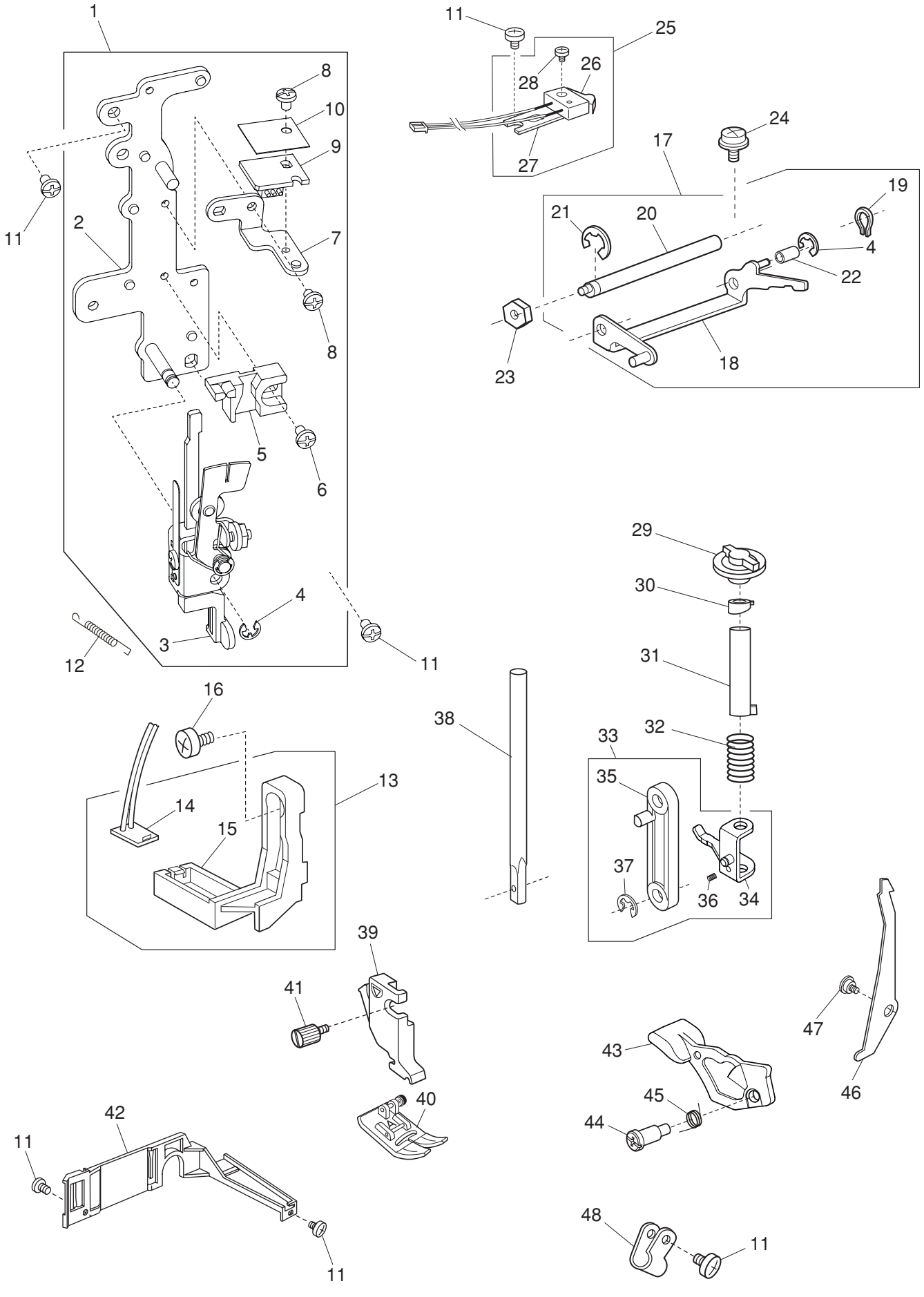
1
11
2
11
8
10
9
7
8
5
6
4
3
12
11
11
25
26
28
27
24
17
19
21
20
4
22
23
18
29
30
31
32
33
35
37
36
34
38
16
14
15
13
39
41
40
42
11
11
43
45
44
47
46
48
11

PARTS LIST

KEY NO.	PARTS NO.	DESCRIPTION
1	863606001	Front bracket (unit)
2	861030013	Front bracket
3	843625406	Buttonhole lever (unit)
4	000002105	Snap ring E-3
5	830057021	Buttonhole lever guide
6	000103808	Setscrew 3x5
7	861031003	Sensor base plate
8	000101105	Setscrew 3x4
9	852502312	Printed circuit board G1 (unit)
10	853028002	Insulation sheet
11	000081005	Setscrew 4x8
12	858312001	Needle bar supporter spring
13	861665507	LED cover (unit)
14	859525817	Printed circuit board L2 (unit)
15	859232021	LED cover
16	000078319	Setscrew 3x6
17	861616101	Presser foot actuator arm (unit)
18	861035007	Presser foot actuator arm
19	000014605	Snap ring 6
20	830060005	Presser foot actuator arm
21	000001609	Snap ring E-5
22	861034006	Bushing
23	000061205	Nut 4-3-7
24	000115629	Setscrew TP 4x8
25	861617009	Presser foot lifter switch (unit)
26	652520099	Micro switch (unit)
27	861029008	Micro switch set plate
28	000102900	Setscrew 2x8
29	858136102	Presser foot pressure adjusting dial
30	858155004	Presser foot pressure adjusting cam
31	858028007	Presser bar bushing
32	861026005	Presser bar spring
33	863614002	Presser bar supporter (unit)
34	863012004	Presser bar supporter
35	861028007	Presser bar link
36	000111500	Hexagonal socket screw 4x8
37	000002507	Snap ring E-4
38	827021200	Presser bar
39	859801027	Presser foot holder (unit)
40	859802006	Zigzag foot (unit)
41	858274000	Thumbscrew
42	861078002	Cord guide
43	863011003	Presser foot lifter lever
44	865049006	Setscrew
45	859029001	Spring
46	861067008	Tension release lever
47	859273002	Setscrew
48	000188601	Nylon clip

PARTS LIST

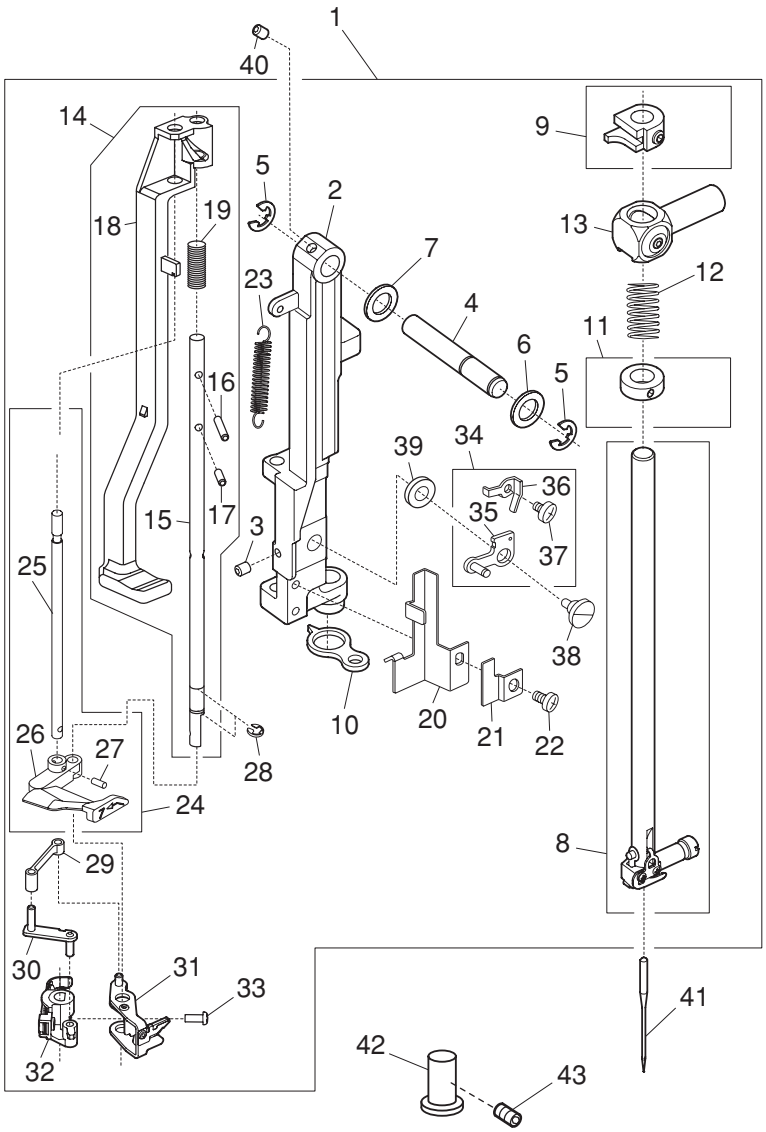
1
40
14
9
5
2
18
19
13
7
23
12
4
11
6
16
5
39
34
36
35
37
15
17
3
25
38
10
20
21
22
26
27
28
24
8
29
30
31
33
32
41
42
43

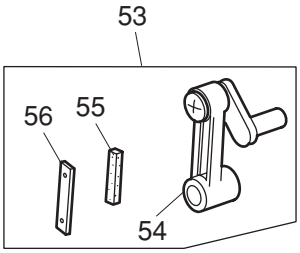
53
56
55
54

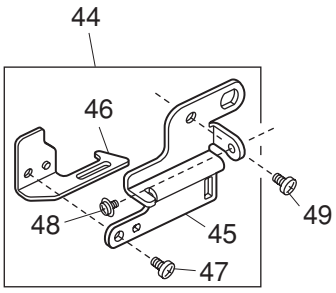
44
46
48
45
49
47

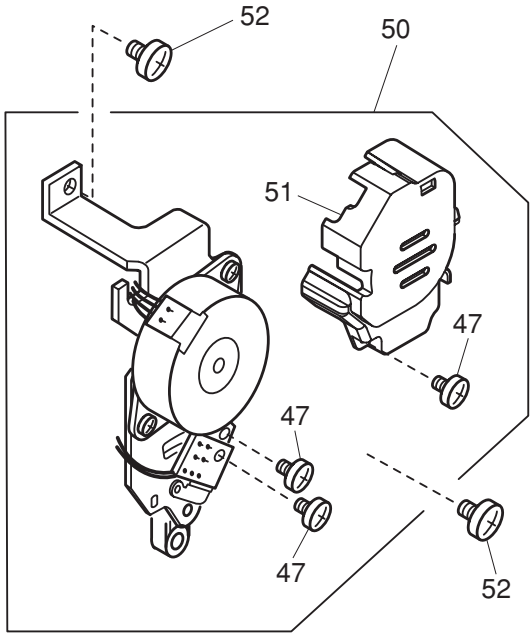
52
50
51
47
47
47
52

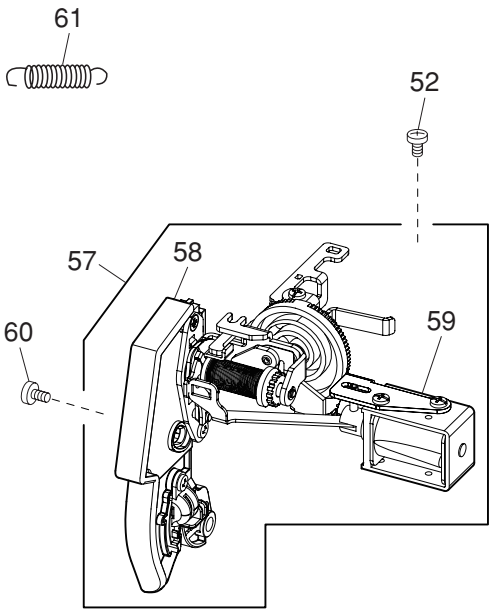
61
52
57
58
59
60

PARTS LIST

KEY NO.	PARTS NO.	DESCRIPTION
1	863629103	Needle bar supporter (unit)
2	858250000	Needle bar supporter
3	000111902	Hexagonal socket screw 3x4
4	735144006	Needle bar supporter pin
5	000002507	Snap ring E-4
6	000070609	Washer 6
7	673022002	Washer
8	858538005	Needle bar (unit)
9	858540000	Rotation pin stopper (unit)
10	829027006	Supporter guide plate
11	858541001	Threader guide ring (unit)
12	858172007	Needle bar supporter spring
13	846515009	Needle bar supporter (unit)
14	858686009	Threader shaft (unit)
15	858255016	Threader shaft
16	000265500	Guide pin E-2x12-CH
17	000265603	Guide pin E-2x6-CH
18	858256006	Threader lever
19	863128004	Needle threader spring
20	858272008	Threader lever supporter
21	863131000	Threader lever supporter 2
22	000078320	Setscrew 3x6
23	858258019	Needle threader return spring
24	862625106	Threader supporter shaft (unit)
25	858259009	Threader supporter shaft
26	814043105	Threader guide
27	000022204	Spring pin 2x6 (K)
28	000001207	Snap ring E-2.5
29	858265008	Link plate 1
30	858266009	Link plate 2
31	862626026	Threader guard plate (unit)
32	862627005	Hook holder (unit)
33	000230403	Setscrew 2x5
34	861630008	Zigzag width rod (unit)
35	808015006	Zigzag width rod
36	827088009	Zigzag width rod spring
37	820373003	Setscrew 2x3
38	678084306	Eccentric pin
39	863127003	Washer
40	000111201	Hexagonal socket screw 4x4
41	647814031	Needle
42	827083004	Supporter guide pin
43	000216805	Hexagonal socket screw 3x3
44	862651101	Arm thread guide (unit)
45	862081104	Arm thread guide
46	862133009	Thread guide plate
47	000101105	Setscrew 3x4
48	000268008	Setscrew TP 3x5
49	000078319	Setscrew 3x6
50	861629004	Zigzag width motor (unit)
51	861055014	Motor cover
52	000081005	Setscrew 4x8
53	846615103	Needle bar crank (unit)
54	843543007	Needle bar crank pin (unit)
55	650040005	Felt
56	650041006	Spring
57	863618017	Thread tension (whole unit)
58	863508013	Thread tension (unit)
59	834604308	Solenoid (unit)
60	000103509	Setscrew 4x10
61	850212017	Spring

PARTS LIST

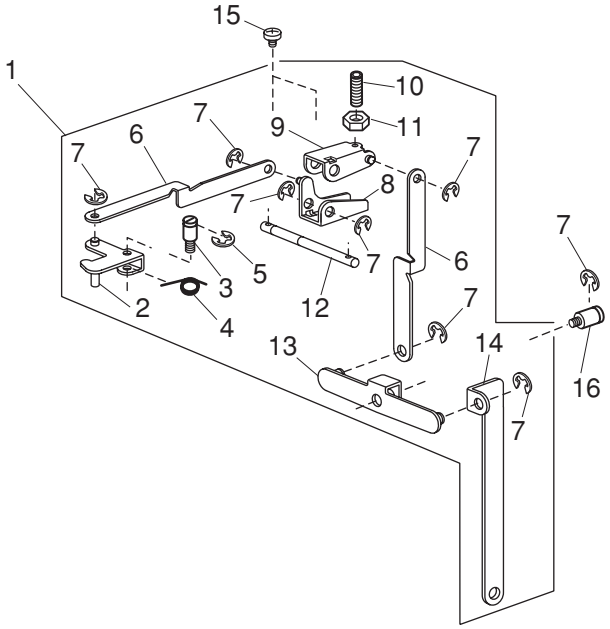
15
1
10
11
9
7
6
7
7
8
7
7
6
5
3
2
4
12
7
13
14
16
7

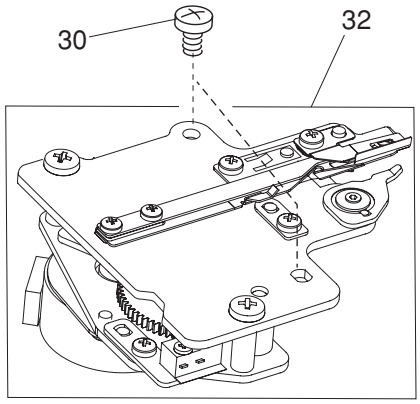
30
32

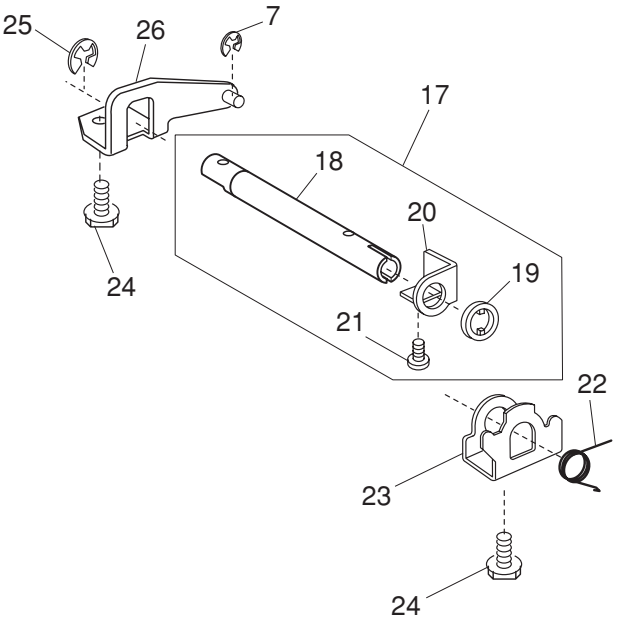
25
26
7
17
18
20
19
24
21
22
23
24

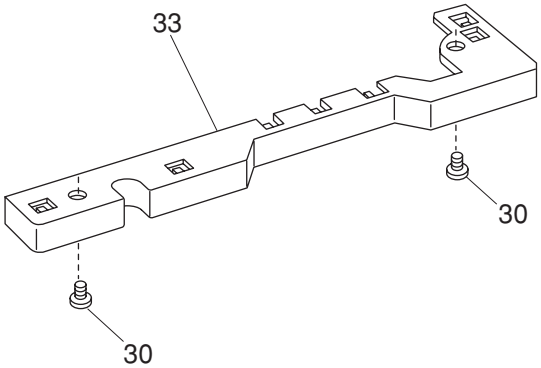
33
30
30

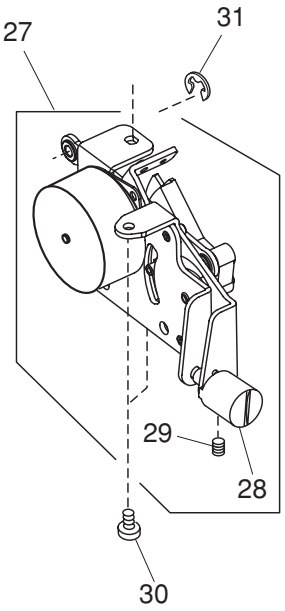
27
31
29
28
30

PARTS LIST

KEY NO.	PARTS NO.	DESCRIPTION
1	861633001	Knee lifter link (unit)
2	861058006	Knee lifter link (1)
3	861059007	Knee lifter link (1) shaft
4	861065006	Knee lifter link (1) spring
5	000001609	Snap ring E-5
6	861060001	Knee lifter rod (1)
7	000002507	Snap ring E-4
8	860053008	Knee lifter link (2)
9	861061002	Knee lifter link (3)
10	000196406	Hexagonal socket screw 4x25
11	000061205	Nut 4-3-7
12	861062003	Knee lifter link (2) shaft
13	861063004	Knee lifter middle link
14	861064005	Knee lifter link (4)
15	000103303	Setscrew 3.5x12
16	686063005	Setscrew
17	861632000	Knee lifter shaft (unit)
18	861057005	Knee lifter shaft
19	846297002	Stopper
20	861072006	Stopper plate
21	000101105	Setscrew 3x4
22	858091001	Knee lifter stopper spring
23	861154003	Knee lifter stopper
24	000138503	Hexagonal socket screw 5x12
25	000002208	Snap ring E-9
26	861066007	Knee lifter shaft arm
27	861628209	Feed motor (unit)
28	859215006	Feed balancing dial
29	000110200	Hexagonal socket screw 4x4 (WP)
30	000081005	Setscrew 4x8
31	000002105	Snap ring E-3
32	861631010	Automatic thread cutter (unit)
33	861077001	Cord guide (Free arm)

PARTS LIST

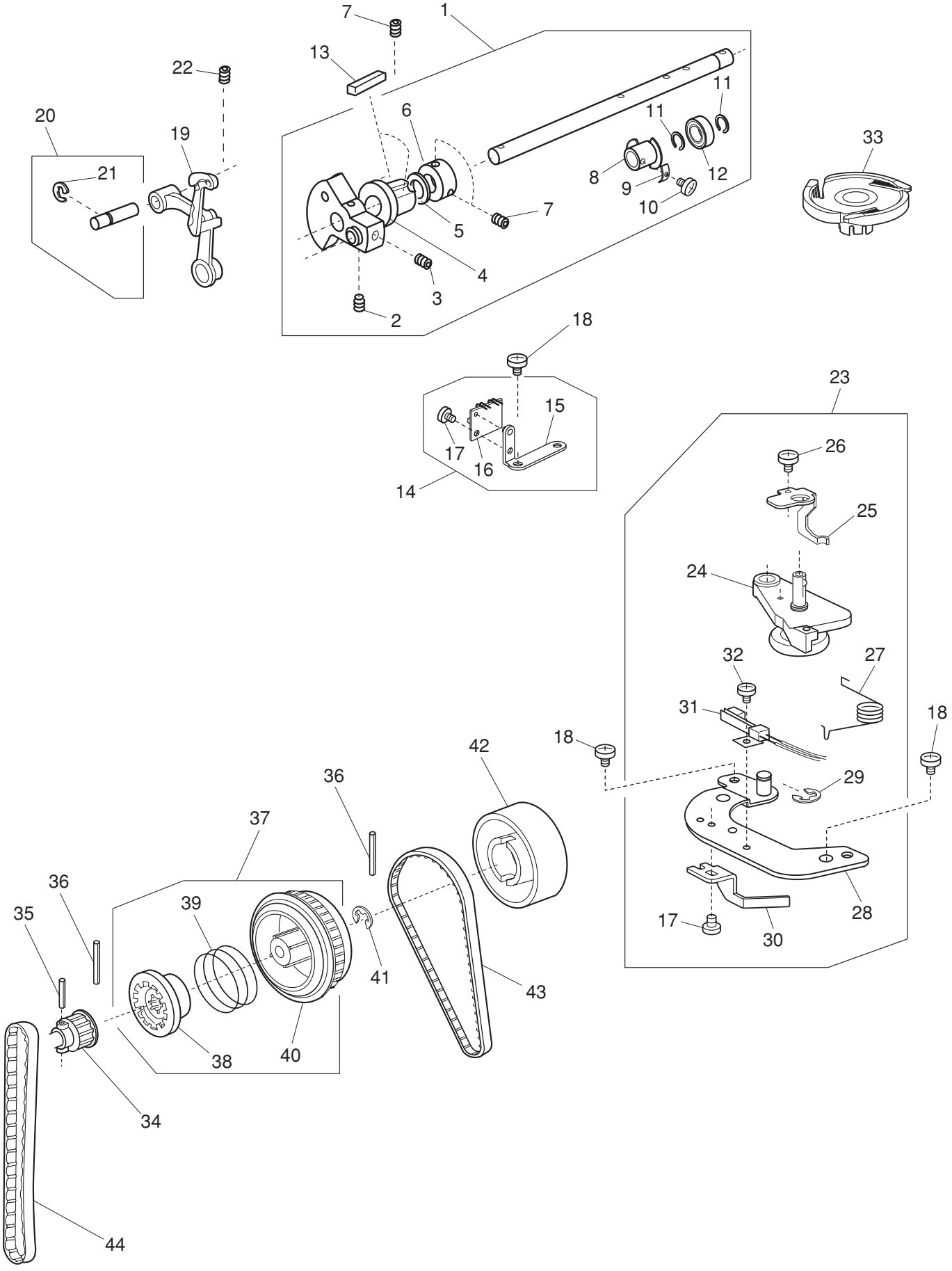
1
2
3
4
5
6
7
8
9
10
11
12
13
14
15
16
17
18
19
20
21
22
23
24
25
26
27
28
29
30
31
32
33
34
35
36
37
38
39
40
41
42
43
44

PARTS LIST

KEY NO.	PARTS NO.	DESCRIPTION
1	861619207	Upper shaft (unit)
2	000111706	Hexagonal socket screw 5x8
3	000110901	Hexagonal socket screw 5x4
4	670079201	Upper shaft front bushing
5	000040105	Washer
6	767077006	Ring
7	000111304	Hexagonal socket screw 5x5
8	859055006	Upper shaft shield plate
9	859033008	Washer
10	000080406	Setscrew 3x10
11	000032702	Snap ring crescent
12	767178101	Ball bearing 6901ZZ
13	731312005	Felt
14	861620201	Upper shaft sensor (unit)
15	861039001	Sensor set plate
16	807505304	Printed circuit board P (unit)
17	000101105	Setscrew 3x4
18	000081005	Setscrew 4x8
19	820511108	Thread take-up lever (unit)
20	650626001	Thread take-up lever pin (unit)
21	000002806	Snap ring E-6
22	000111201	Hexagonal socket screw 4x4
23	861636314	Bobbin winder (unit)
24	861503023	Bobbin winder
25	861096006	Clutch lever
26	000120203	Setscrew 3x8 (B)
27	865046003	Bobbin winder arm spring
28	861092002	Bobbin winder set plate
29	000001609	Snap ring E-5
30	861098008	Guide plate
31	856512203	Leaf switch (unit)
32	000081706	Setscrew 2.5x5
33	809619009	Thread cutter holder (unit)
34	858052000	Upper shaft gear
35	000004303	Spring pin 3x20
36	000024206	Spring pin 3x30
37	858647008	Belt wheel (unit)
38	858053001	Clutch ring
39	502065004	Clutch spring
40	858054002	Belt wheel
41	000030009	Snap ring E-10
42	858055003	Handwheel
43	846098104	Timing belt 178
44	858118108	Timing belt 168

PARTS LIST

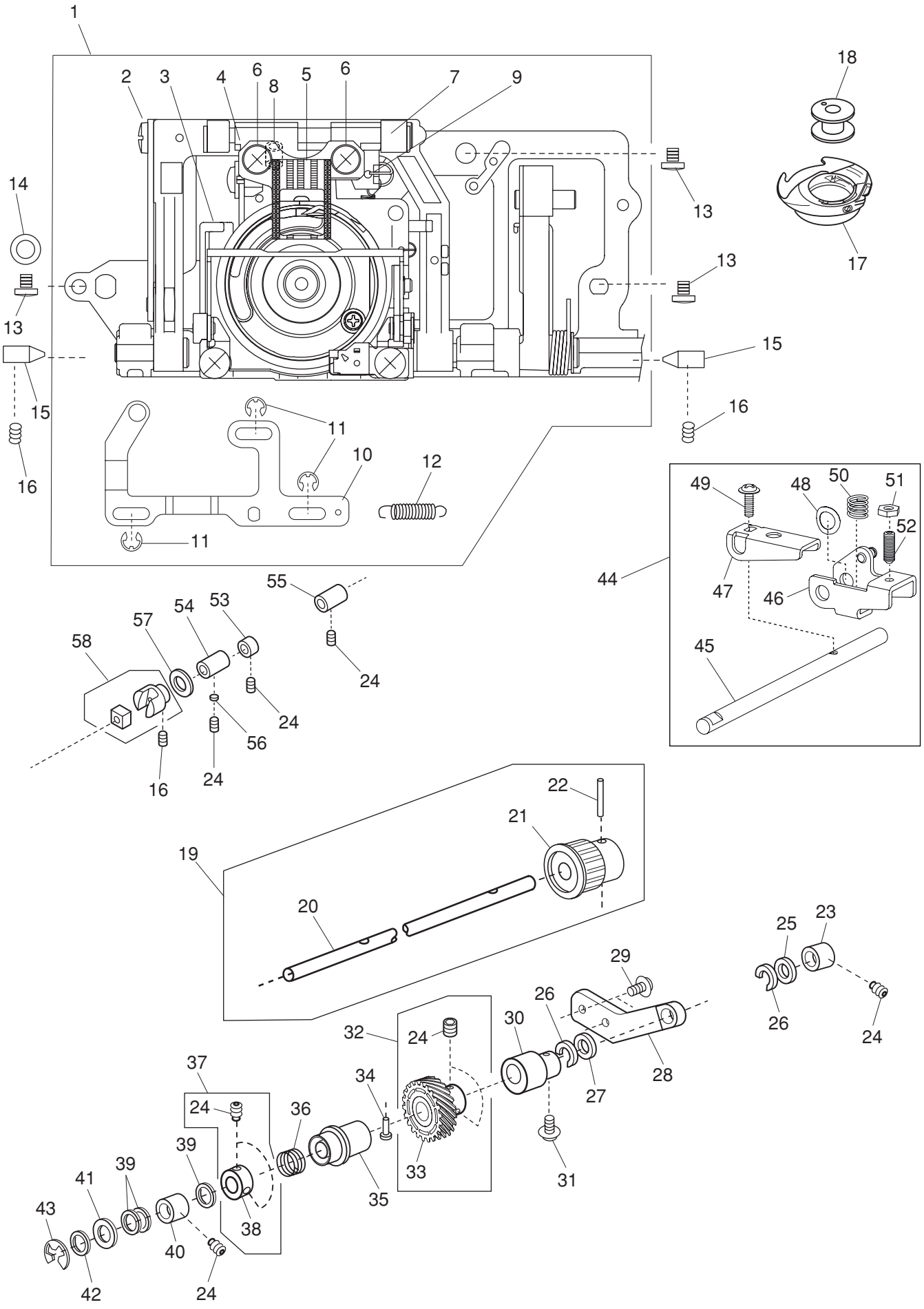
1
2
3
4
6
8
5
6
7
9
18
14
13
13
17
13
15
15
16
16
11
10
12
11
49
48
50
51
52
44
47
46
45
55
54
53
57
58
24
24
56
24
16
22
21
19
20
25
23
29
26
26
24
30
32
24
28
37
34
27
24
36
39
39
41
33
31
35
43
38
40
42
24

PARTS LIST

KEY NO.	PARTS NO.	DESCRIPTION
1	861625103	Feed rock shaft (whole unit)
2	846629100	Feed rock shaft (unit)
3	861626104	Hook race (unit)
4	859639000	Feed base (unit)
5	859113003	Feed dog
6	000104005	Setscrew 3.5x8
7	825099007	Feed base shaft
8	000111407	Hexagonal socket screw 4x6
9	825103005	Feed base spring
10	858138001	Drop plate
11	000002105	Snap ring E-3
12	661018008	Spring
13	000081005	Setscrew 4x8
14	000070506	Washer 4
15	738055008	Straight pin
16	000111304	Hexagonal socket screw 5x5
17	858570009	Bobbin holder (unit)
18	102261103	Bobbin
19	861621006	Lower shaft (unit)
20	861040005	Lower shaft
21	650073007	Lower shaft gear
22	000004200	Spring pin 3x18
23	650079003	Lower shaft bushing (rear)
24	000111201	Hexagonal socket screw 4x4
25	822070003	Felt (1)
26	822112008	Felt holder (1)
27	861051009	Felt
28	858058006	Lower shaft supporter
29	000115700	Setscrew TP 4x10
30	846379009	Feed cam
31	000149600	Setscrew 3x14
32	850687109	Lower shaft gear (unit)
33	808137005	Lower shaft gear
34	820161006	Feed lifting pin
35	846103000	Feed lifting cam
36	825093001	Feed lifting cam spring
37	820672005	Lower shaft ring (unit)
38	820166001	Lower shaft ring
39	000038502	Washer
40	858060001	Lower shaft bushing (front)
41	735143005	Felt
42	858177002	Lower shaft washer
43	000002806	Snap ring E-6
44	861627002	Feed shaft (unit)
45	861048003	Feed shaft
46	858129009	Feed arm (1)
47	858130003	Feed arm (2)
48	810207004	Washer
49	000201302	Setscrew TP 3x10
50	589040002	Spring
51	000160102	Adjustable lock nut 4
52	000177401	Hexagonal socket screw 4x12
53	820387000	Ring
54	625144002	Feed shaft bushing (front)
55	650092002	Feed shaft bushing (rear)
56	650175000	Washer
57	823110009	Felt
58	625508008	Feed regulator (unit)

PARTS LIST

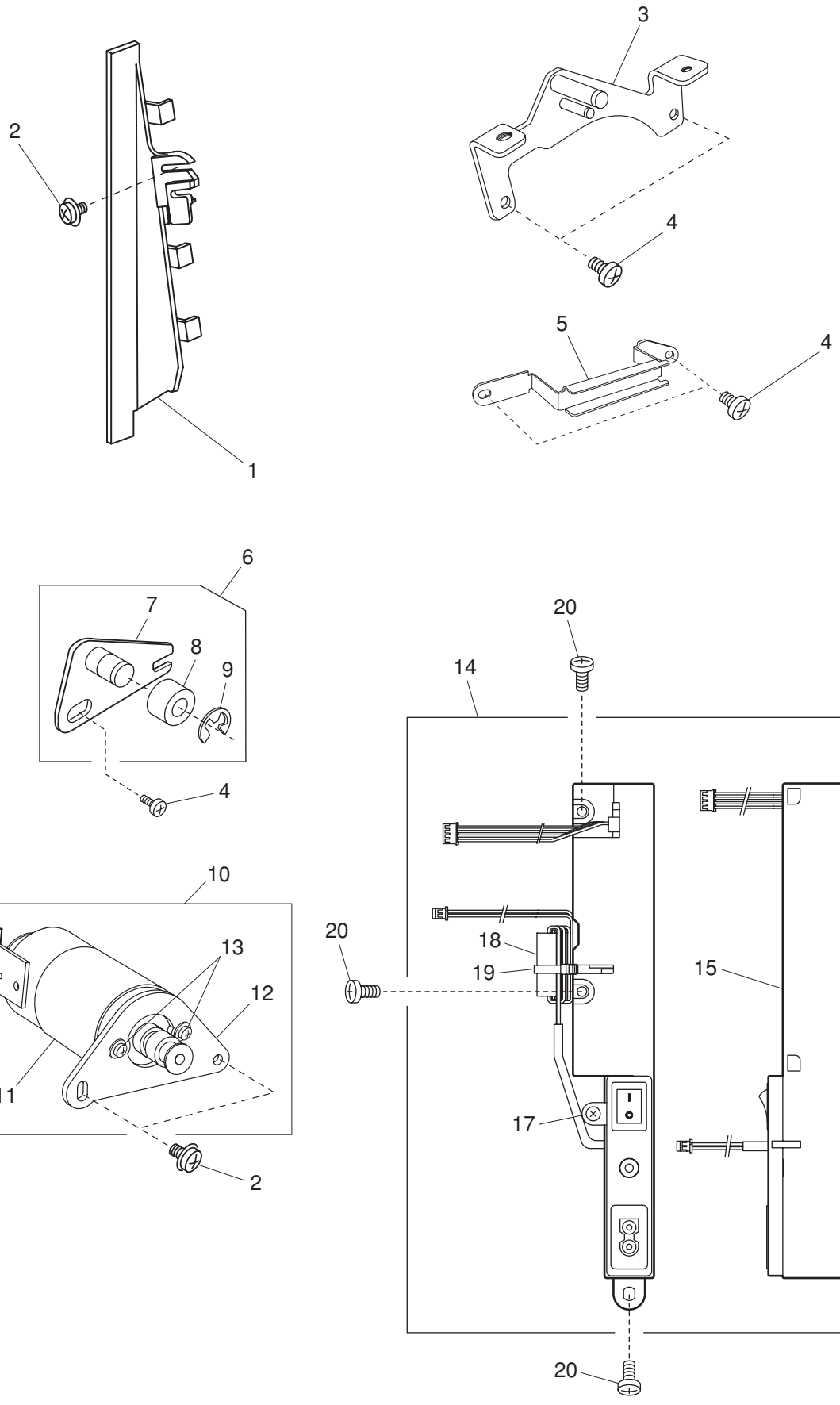

PARTS LIST

KEY NO.	PARTS NO.	DESCRIPTION
1	858145012	Cord guide plate
2	000115607	Setscrew TP 4x8
3	861075009	Carrying handle supporter (rear)
4	000081005	Setscrew 4x8
5	861089006	Cord guide
6	860608004	Idler (unit)
7	860021007	Idler base
8	625217100	Idler
9	000002806	Snap ring E-6
10	858639100	DC motor (unit)
11	843518807	DC motor
12	858117004	DC motor bracket
13	000115009	Setscrew TP 3x8
14	861640001	Switching power supply (unit) (U.S.A) (Canada)
	861640104	Switching power supply (unit) (Continental Europe) (Australia)
15	858120000	Switching power supply plate
16	000119704	Setscrew 3x14 (B)
17	000161206	Setscrew 3x10 (B)
18	808108007	Ferrite core (Continental Europe) (Australia)
19	000053101	Cord binder (Continental Europe) (Australia)
20	000103509	Setscrew 4x10

PARTS LIST

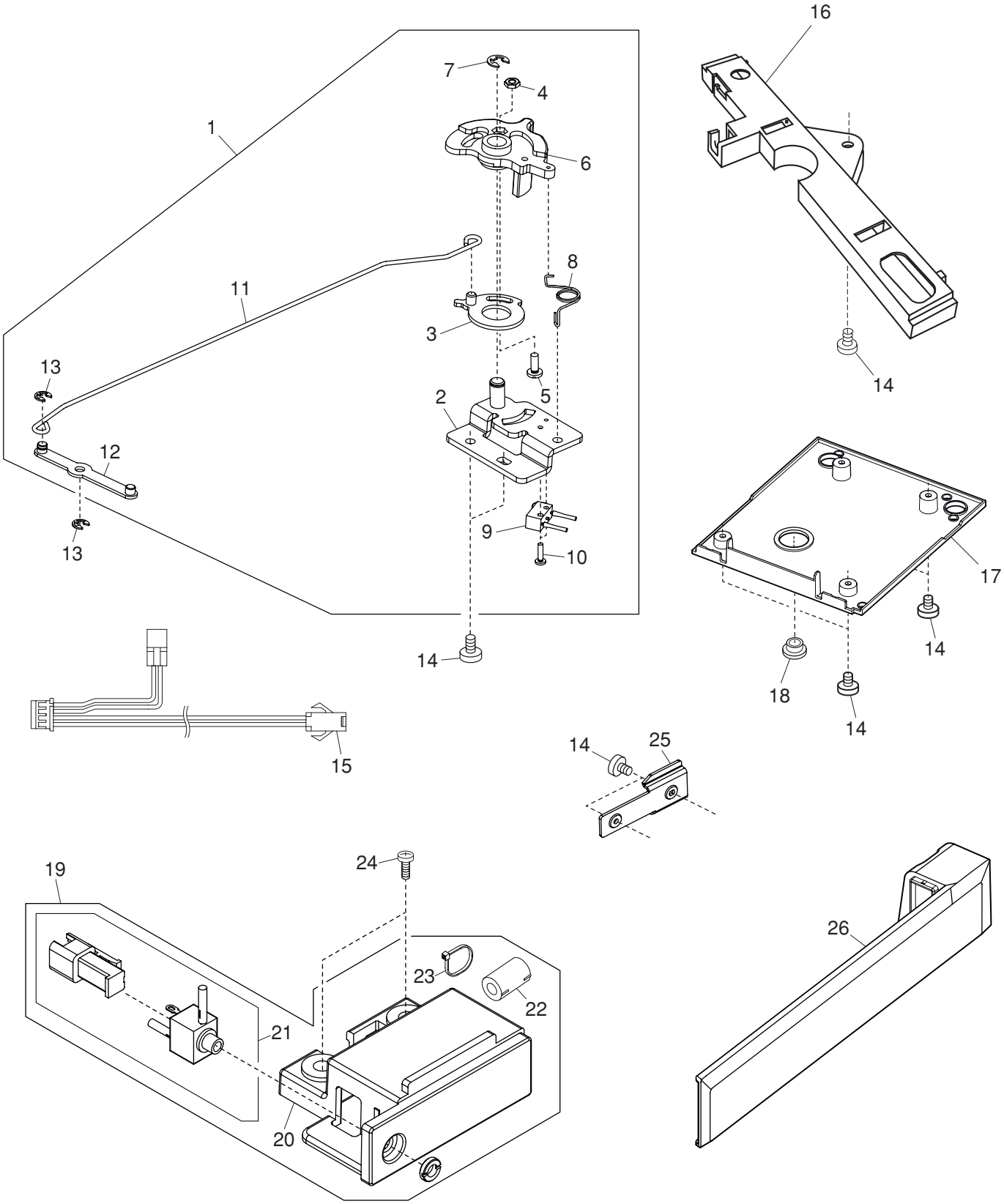
1
2
3
4
5
6
7
8
9
10
11
12
13
13
14
14
15
16
14
17
14
18
14
14
25
19
24
23
22
21
20
26

PARTS LIST

KEY NO.	PARTS NO.	DESCRIPTION
1	863621002	Feed dog drop lever (unit)
2	858141007	Feed dog drop lever base
3	858142008	Feed dog drop lever connecting plate
4	000061803	Nut 3-3-5.5
5	000066705	Setscrew 3x8
6	858143009	Feed dog drop lever
7	000002507	Snap ring E-4
8	823119008	Spring
9	846513029	Micro switch (unit)
10	000102900	Setscrew 2x8
11	863038006	Rod
12	858139002	Drop connecting block
13	000002105	Snap ring E-3
14	000081005	Setscrew 4x8
15	863503100	Junction cable
16	858159019	Cord guide 2
17	861086106	Base plate
18	626045407	Cap
19	863622003	Printed circuit board B case (unit) (U.S.A.) (Canada)
	863622106	Printed circuit board B case (unit) (Continental Europe) (Australia)
20	861090022	Printed circuit board B case
21	767541202	Jack cord (unit) (U.S.A) (Canada)
	767541305	Jack cord (unit) (Continental Europe) (Australia)
22	863504008	Ferrite core (unit) (Continental Europe) (Australia)
23	000053101	Cord binder (Continental Europe) (Australia)
24	000101703	Setscrew 4x12
25	863036004	Rail
26	861088108	Rail cover

PARTS LIST

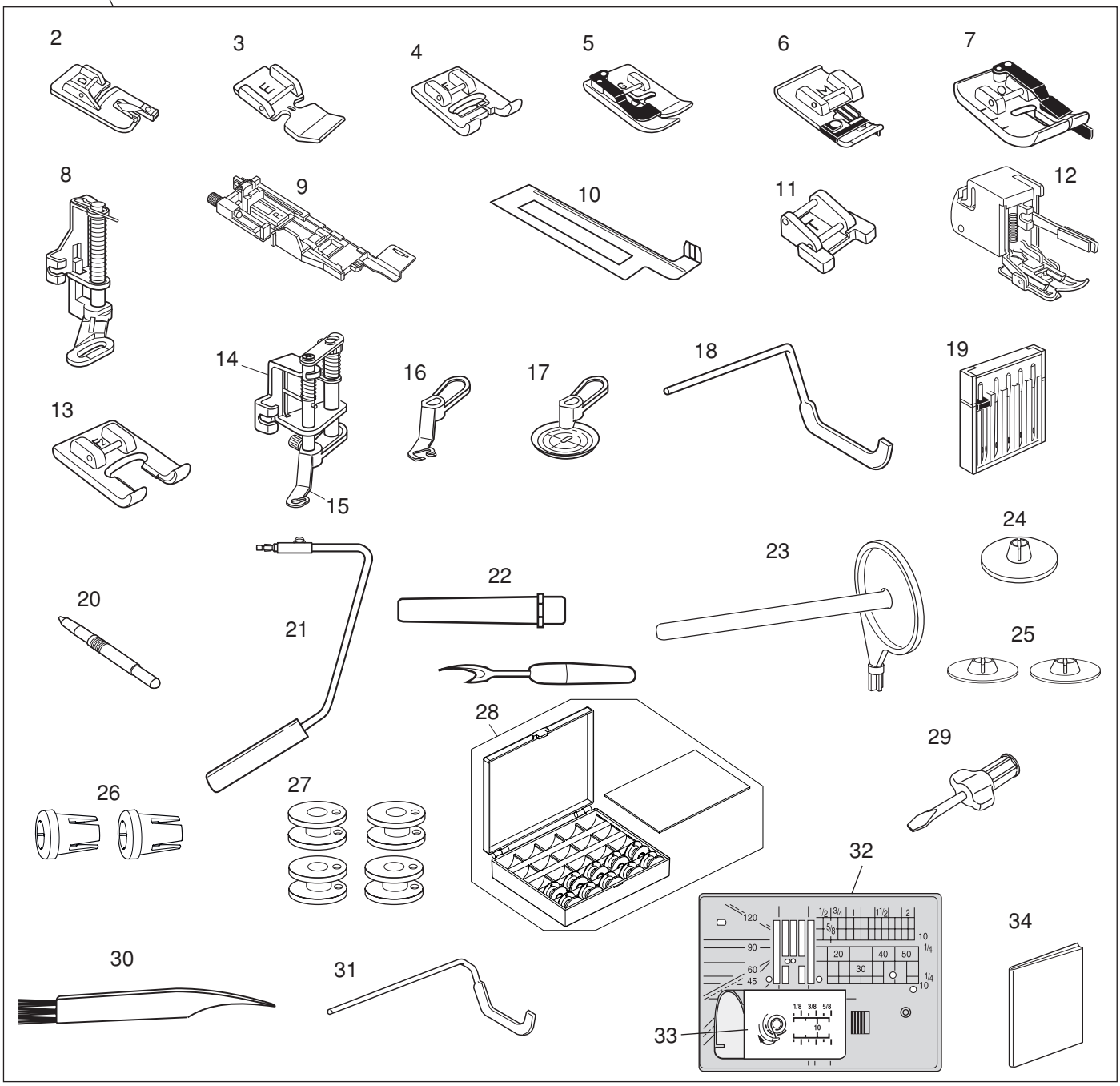
1
2
3
4
5
6
7
8
9
10
11
12
13
14
15
16
17
18
19
20
21
22
23
24
25
26
27
28
29
30
31
32
33
34

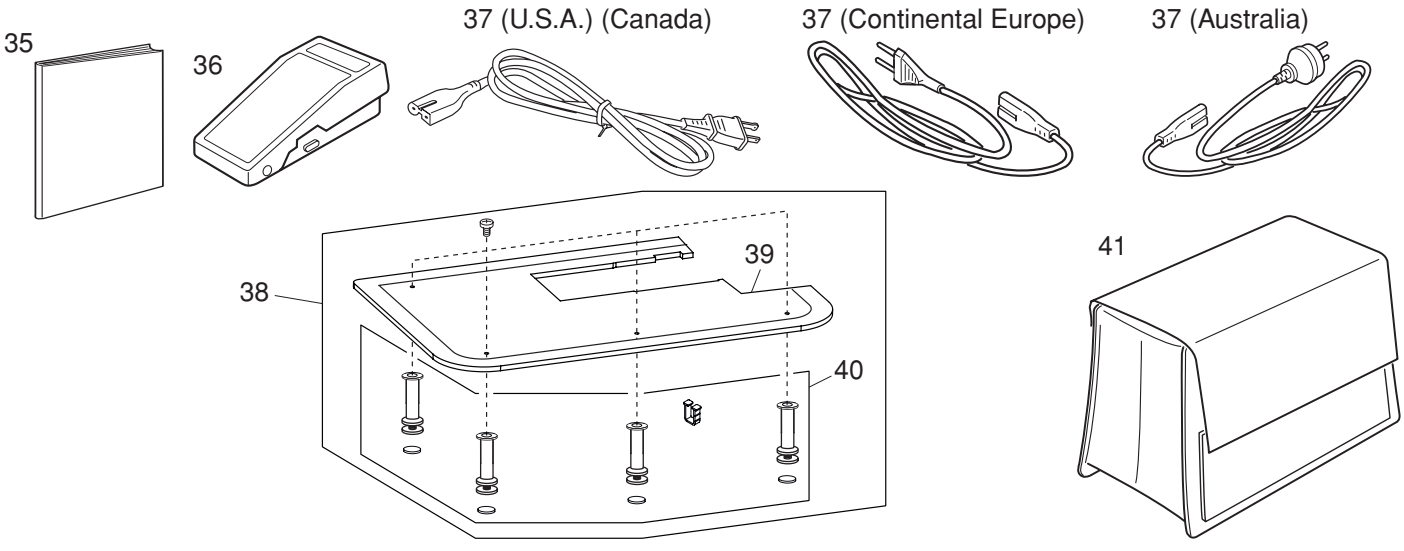
35
36
37 (U.S.A.) (Canada)
37 (Continental Europe)
37 (Australia)
38
39
40
41

PARTS LIST

KEY NO.	PARTS NO.	DESCRIPTION
1	863871009	Accessories set
2	859804008	Rolled hem foot D
3	859805009	Zipper foot E
4	859806011	Satin stitch foot F
5	859807001	Blind hemming foot G
6	859810007	Overedge foot M
7	859814012	1/4″ Seam foot O
8	859839002	Darning foot PD-H
9	862822013	Automatic buttonhole foot R
10	859832016	Stabilizer plate
11	859811008	Button sewing foot T
12	202137009	Even feed foot
13	859813000	Open toe satin stitch foot F2
14	858820018	Convertible free motion quilting foot QB-S
15	858820111	Close-toe foot
16	858821019	Open-toe foot
17	858822009	Clear view foot
18	214015007	Quilting guide bar for even feed foot
19	859856005	Needle case (unit)
20	860194002	Touch panel stylus
21	846417011	Knee lifter
22	647808009	Seam ripper (buttonhole opener)
23	809041004	Extra spool pin
24	822020503	Spool holder (large)
25	822019509	Spool holders (small)
26	862408008	Spool holders (special)
27	102261103	Bobbin
28	202260002	Bobbin (unit)
29	820832005	Screwdriver
30	802424004	Lint brush
31	755802001	Quilting guide bar
32	862817118	Straight stitch needle plate
33	809136100	Hook cover plate
34	858801002	Caution card
35	863800650	Instruction book (English)
	863800672	Instruction book (French)
36	C-1036	Foot control
37	856519004	Power cable (U.S.A.) (Canada)
	830335004	Power cable (Continental Europe)
	830314018	Power cable (Australia)
38	863409002	Extra wide table (unit)
39	861401514	Extra wide table top
40	859867010	Extra wide table accessories (unit)
41	858802069	Cover