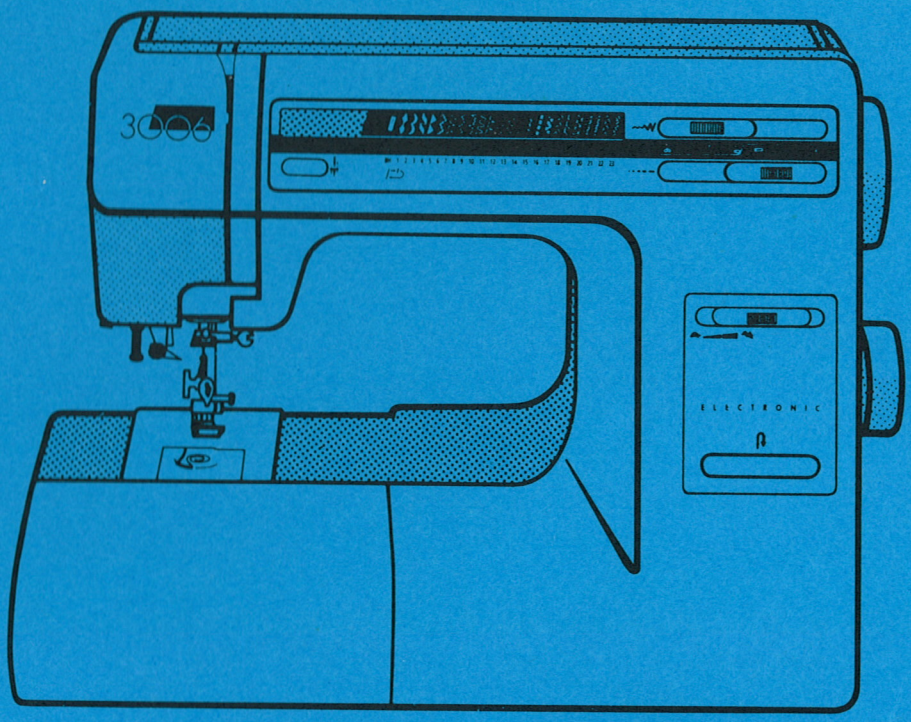

3002 3004 3006

PIECES DE RECHANGE
ERSATZTEILE
SPARE PARTS
PIEZAS DE RECAMBIO

February 1995

Printed in Switzerland

395 900 - 80

INDEX

3002/3004

1 Accessory box/extension table, needle plate, bottom cover

2 Upper cover, face plate

3 Thread tension dial, front base plate threader

4 Presser bar, needle bar

5 Upper shaf, take-up lever, balance wheel

6 Shuttle, feed rock shaft, lower shaft

7 Zigzag mechanism, pattern selector

8 Front panel 3002

9 Front panel 3004

10 Motor 120V, machine socket, belt cover, handle

11 Motor 230V, machine socket, belt cover, handle

3006

12 Accessory box/extension table, needle plate, bottom cover

13 Upper cover, face plate

14 Thread tension dial, front base plate threader

15 Presser bar, needle bar

16 Upper shaft, take-up lever, balance wheel

17 Shuttle, feed rock shaft, lower shaft

18 Zigzag mechanism, pattern selector

19 Front panel

20 Motor, machine socket, belt cover, handle

21 Accessories, foot controls, instruction manuals (3002/3004/3006)

22 Drawing number index and weights

1

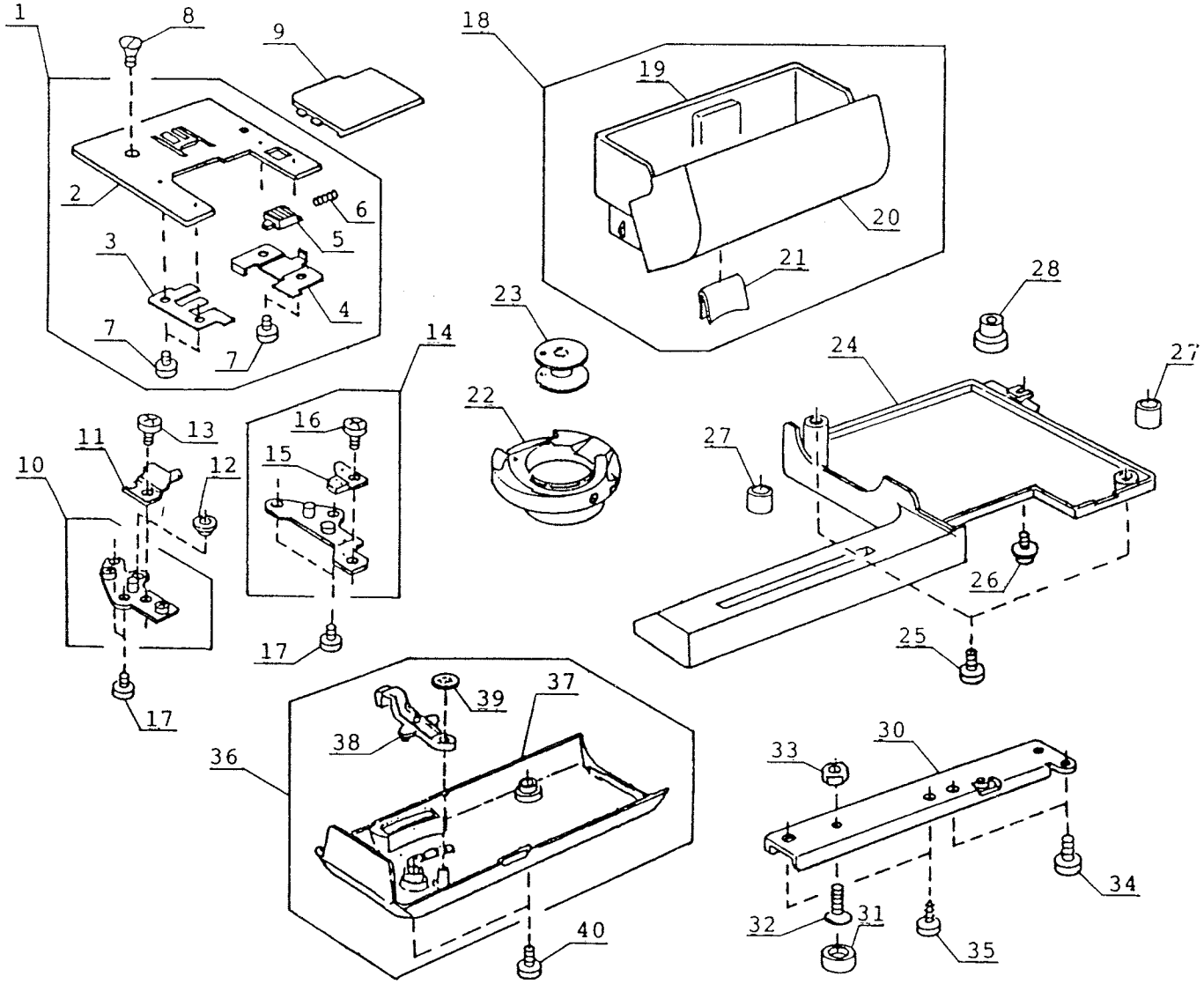
1
8
9
18
19
2
6
5
20
3
21
4
28
23
7
7
14
24
27
22
16
13
11
15
27
10
12
26
17
25
17
39
37
38
36
30
33
34
32
31
35
40

3002 - 3004

No.	Part No.	Tavaro No.	Designation
1	753603004	395713-14	Needle plate unit, complete
2	753501001	395713-15	Needle plate unit
3	825014008	395713-16	Slide plate holder (left)
4	825015010	395713-17	Slide plate holder (right)
5	825016000	395713-18	Slide plate release button
6	825017001	395713-19	Slide plate release button spring
7	820374004	395713-20	Set screw 2 x 2.3
8	820390109	395713-21	Set screw
9	825018013	395719-01	Slide plate
10	650602001	395713-22	Needle plate supporter unit (left)
11	822011109	395713-23	Pawl plate
12	822314002	395713-24	Nut
13	000103808	395711-06	Set screw 3 x 5
14	650603002	395713-25	Needle plate supporter unit (right)
15	627567001	395713-26	Bobbin holder stopper unit
16	810220003	395713-27	Set screw
17	000107503	395713-28	Tapping screw 4 x 6
18	753526002	395713-29	Extension table unit
19	753006001	395713-30	Extension table
20	753007002	395713-31	Extension table lid
21	686010007	395713-32	Extension table spring
22	627569106	395713-33	Bobbin holder unit
23	102261103	494430-20	Bobbin
24	753003008	395713-34	Base
25	000081005	395710-42	Set screw 4 x 8
26	000115205	395710-41	TP screw 4 x 6
27	647009002	395713-35	Bed rubber seat
28	735003002	395713-36	Rubber foot
30	753002007	395713-37	Arm sole
31	735002001	395710-76	Rubber seat
32	000097302	395713-38	Set screw
33	000061319	395710-78	Hexagon nut 5-1-8
34	000066808	395713-39	Set screw 6 x 14
35	000075604	395713-40	Set screw 4 x 12
36	753601002	395713-41	Bed cover unit
37	652005107	395713-42	Bed cover
38	753005000	395713-43	Drop lever
39	000013903	395710-98	Snap ring CS-5
40	000101703	395711-12	Set screw 4 x 12
1a	754636009	395735-09	Needle plate (new version)

2

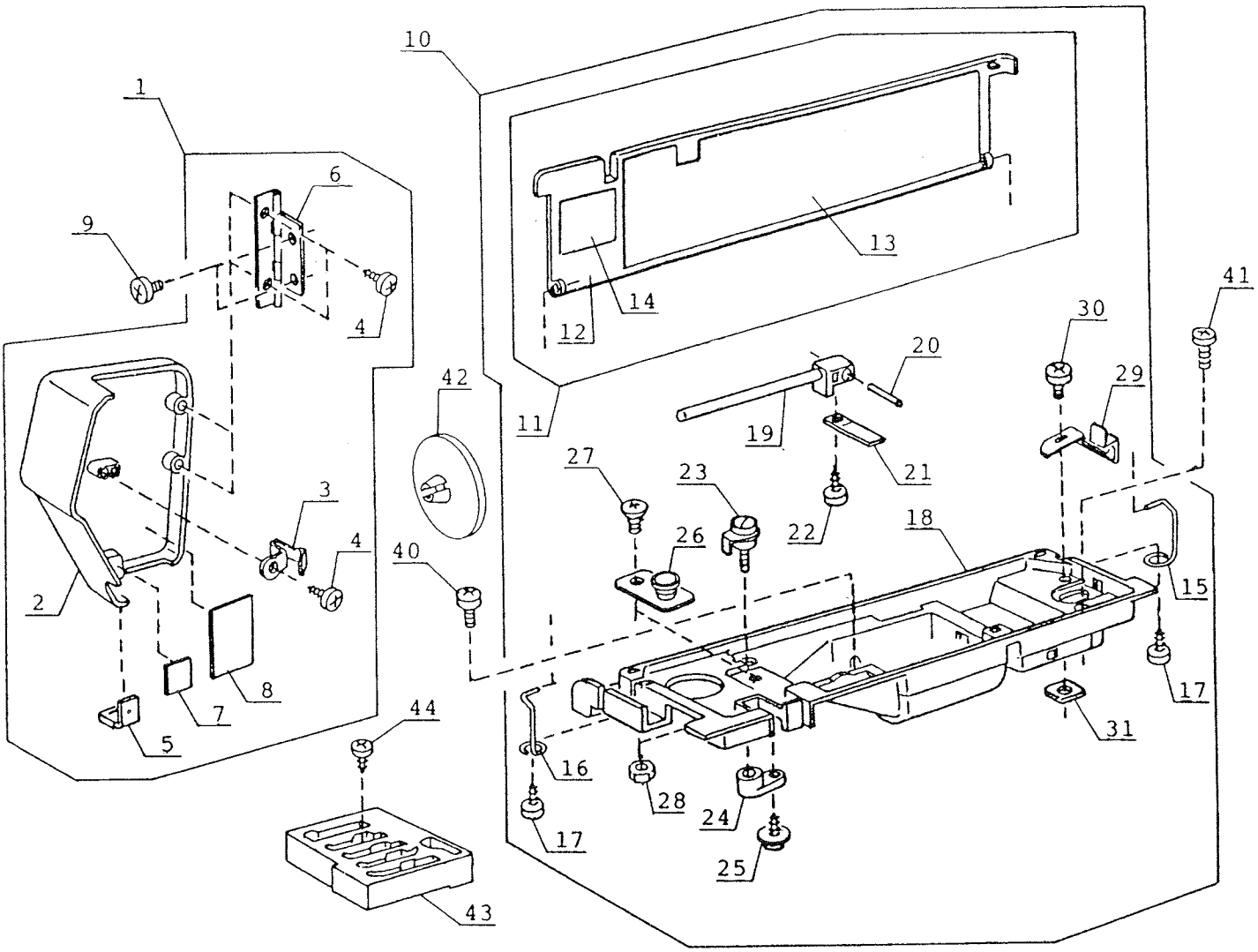

1
2
3
4
4
5
6
7
8
9
10
11
12
13
14
15
16
17
17
18
19
20
21
22
23
24
25
26
27
28
29
30
31
40
41
42
43
44

3002 - 3004

No.	Part No.	Tavaro No.	Designation
1	753606801	395713-44	Face plate unit (3002)
	753606904	395713-45	Face plate unit (3004)
2	753017603	395713-46	Face plate (3002)
	753017500	395713-47	Face plate (3004)
3	650025004	395713-48	Face plate spring
4	000076502	395713-49	Set screw 3x8
5	822532008	395710-69	Thread cutter unit
6	366501102	395713-50	Face plate hinge unit
7	724024005	395713-51	Reflecting plate (1)
8	724025006	395713-52	Reflecting plate (2)
9	000081119	395713-53	Set screw 4x6
10	753604706	395713-54	Top cover unit (3002), complete
	753604603	395713-55	Top cover unit (3004), complete
11	753605604	395713-56	Top cover unit (3002)
	753605707	395713-57	Top cover unit (3004)
12	753012000	395713-58	Top cover
13	753242001	395713-59	Flip-top sewing instruction panel (3002)
	753237106	395713-60	Flip-top sewing instruction panel (3004)
14	753238200	395713-61	BH sticker (3002)
	753238107	395713-62	BH sticker (3004)
15	753014002	395713-63	Hinge rod (right)
16	753129001	395713-64	Hinge rod (left)
17	000120203	395713-65	Tapping screw 3x8 (B)
18	753015106	395713-66	Top cover body
19	822016403	395713-67	Spool pin
20	822017002	395713-68	Pin
21	822018003	395713-69	Spring
22	000107318	395713-70	Tapping screw 3x8 (B)
23	730501000	395710-50	Bobbin winder thread guide unit
24	822021009	395713-71	Thread guide holder
25	000149002	395713-72	Set screw 3 x 10
26	753502002	395713-73	Top cover thread guide holder unit
27	693093006	395713-74	Set screw
28	000062701	395713-75	Hexagon nut 3.5-3-6
29	687022005	395713-76	Bobbin winder stopper
30	000066727	395713-77	Set screw 3 x 8
31	630005006	395713-78	Nut
40	000170507	395713-79	Set screw 4 x 12
41	000080901	395713-80	Set screw 4 x 25
42	822020307	395713-81	Spool holder (large)
43	686016209	395713-82	Foot container
44	000120214	395713-83	Tapping screw 3 x 8 (B)

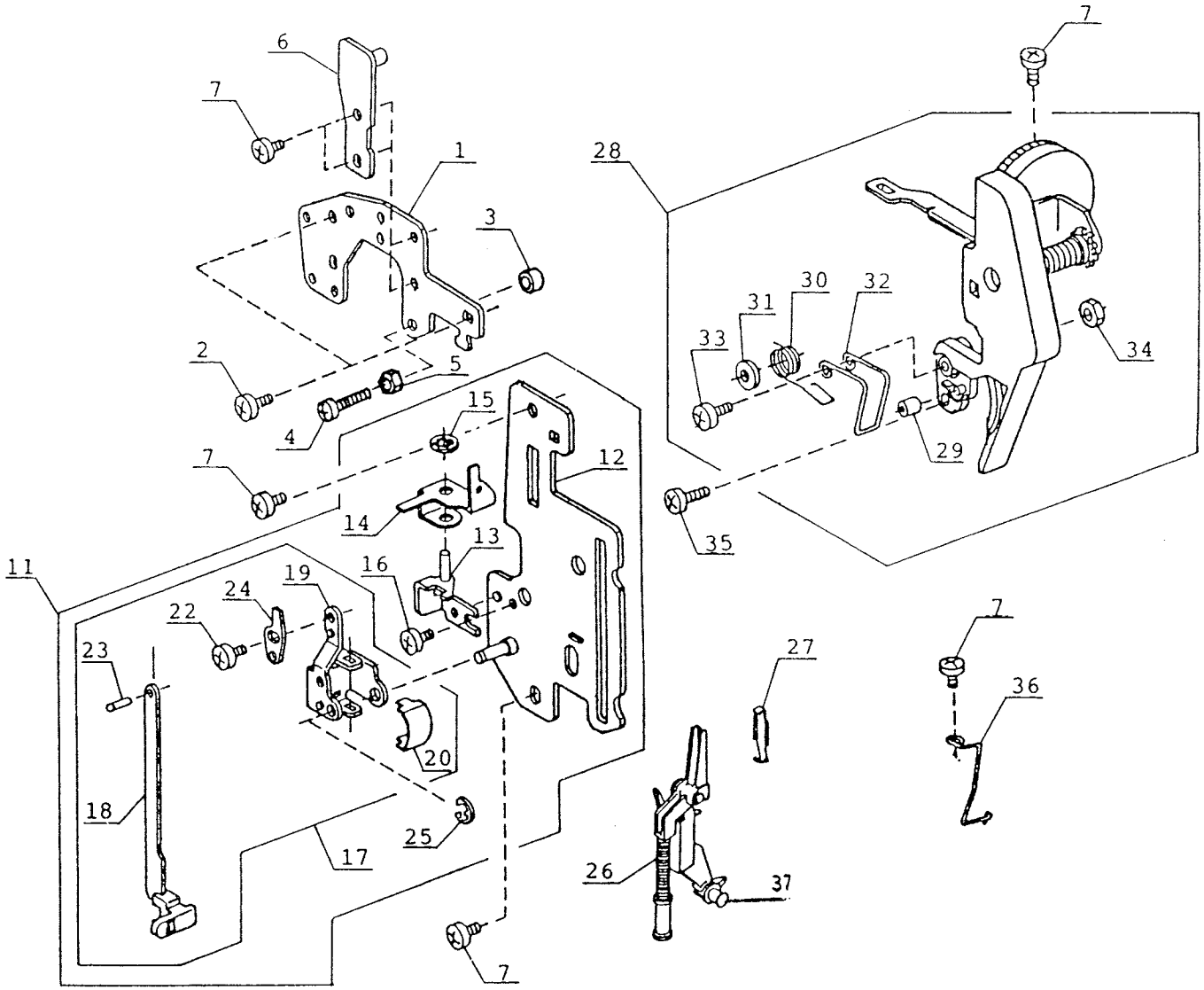
6
7
1
3
2
5
4
15
7
12
14
13
11
16
19
24
22
23
20
18
25
17
7
28
7
31
30
32
33
34
29
35
27
7
36
26
37

3002 - 3004

No.	Part No.	Tavaro No.	Designation
1	753019007	395713-84	Lamp socket holder plate
2	000081005	395710-42	Set screw 4 x 8
3	685042005	395713-85	Supporter stopper
4	000104809	395713-86	Set screw 4 x 35
5	000160102	395710-51	Adjustable nut 4
6	686059008	395713-87	Handle supporter plate
7	000101404	395710-38	Set screw 4 x 6
11	753625002	395713-88	Front base plate unit
12	753022003	395713-89	Front base plate
13	753023004	395713-90	Drag rod link holder (front)
14	753024005	395713-91	Drag rod link (front)
15	000014007	395712-07	Snap ring CS-4
16	000081119	395713-53	Set screw 4 x 6
17	753626003	395713-92	BH lever unit
18	753629006	395713-93	BH lever
19	753026007	395713-94	BH lever supporter
20	753027008	395713-95	Friction spring
22	000101105	395713-96	Set screw 3 x 4
23	000023009	395713-97	Spring pin 1.6 x 4
24	753029000	395713-98	BH lever adjusting plate
25	000001207	395713-99	Snap ring E-2.5
26	822510000	395714-00	Threader unit
27	625084003	395714-01	Spring
28	753503003	395714-02	Thread tension dial unit
29	650043008	395714-03	Check spring cushion
30	652038006	395714-04	Check spring
31	652039007	395711-11	Washer
32	652037005	395714-05	Thread guide
33	000104304	395714-06	Set screw 3 x 14
34	000060857	395714-07	Hexagon nut 3-1-5.5
35	000101703	395711-12	Set screw 4 x 12
36	652137006	395714-08	Arm thread guide (2)
37	627170003	395714-09	Threader pin

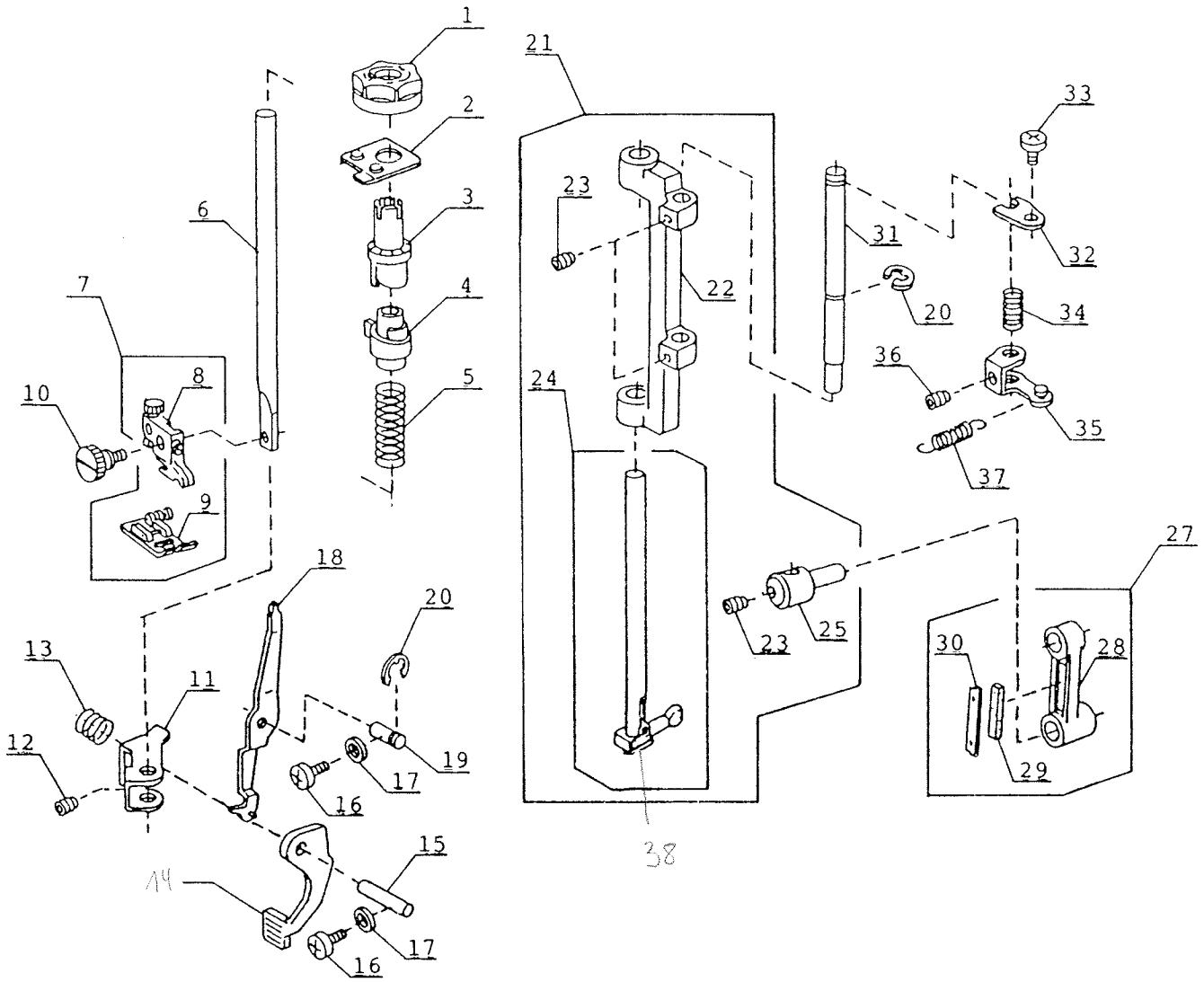
1
2
3
4
5
6
7
8
9
10
11
12
13
14
15
16
17
18
19
20
21
22
23
24
25
27
28
29
30
31
32
33
34
35
36
37
38

3002 - 3004

No.	Part No.	Tavaro No.	Designation
1	822065005	395714-10	Pressure dial
2	824009007	395714-11	Pressure adjusting cam holder
3	686027007	395714-12	Pressure adjusting cam (1)
4	686028008	395714-13	Pressure adjusting cam (2)
5	815023009	395714-14	Presser bar spring
6	102801008	395714-15	Presser bar
7	822525008	395714-16	Presser foot unit
8	804509000	395714-17	Foot holder unit
9	825510032	395719-29	Zigzag foot unit
10	102012004	395714-18	Thumb screw
11	686074009	395714-19	Presser bar bracket
12	000111500	395710-94	Hexagon socket screw 4 x 8
13	102222009	395714-20	Darner spring
14	652145007	395714-21	Presser foot lifter
15	822072005	395714-22	Presser foot lifter pin
16	000103509	395712-61	Set screw 4 x 10
17	000070506	395714-23	Plain washer 4
18	652146008	395714-24	Thread tension release lever
19	652042003	395714-25	Thread tension release lever pin
20	000001609	395710-96	Snap ring E-5
21	686611004	395714-26	Needle bar supporter unit
22	650038000	395714-27	Needle bar supporter
23	000111201	395712-14	Hexagon socket screw 4 x 4
24	822658xxx	395714-28	Needle bar unit
25	650100004	395714-29	Needle bar connecting stud
27	686612005	395714-31	Needle bar crank rod unit
28	625226009	395714-32	Needle bar crank rod
29	650040005	395714-33	Felt
30	650041006	395714-34	Felt holder spring
31	650033005	395714-35	Needle bar supporter shaft
32	650034006	395714-36	Needle bar supporter shaft holder plate
33	000101404	395710-38	Set screw 4 x 6
34	650036008	395714-37	Needle bar supporter shaft spring
35	650035007	395714-38	Zigzag width crank
36	000111108	395714-39	Hexagon socket screw 4 x 6
37	686085003	395714-40	Needle bar supporter spring
38	822506014	395722-95	Needle clamp

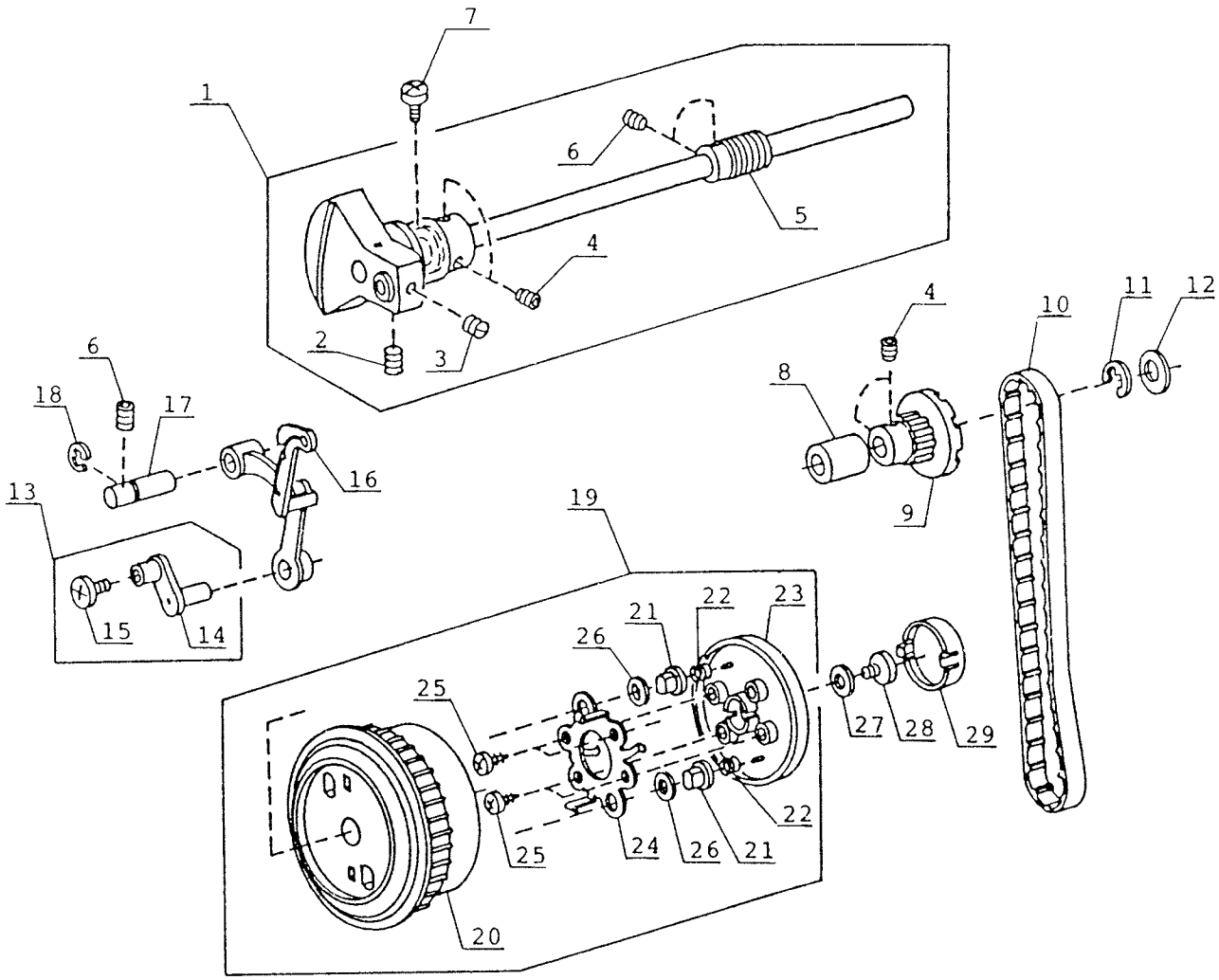
7
1
6
5
4
2
3
6
18
17
16
13
15
14
4
10
11
12
8
9
19
21
22
23
26
25
27
28
29
25
24
26
21
22
20

3002 - 3004

No.	Part No.	Tavaro No.	Designation
1	686623009	395714-41	Upper shaft unit
2	102073003	395714-42	Set screw
3	102063000	395714-43	Set screw
4	000111304	395711-25	Hexagon socket screw 5 x 5
5	650060001	395714-44	Worm gear
6	000111201	395712-14	Hexagon socket screw 4 x 4
7	000101301	395711-57	Set screw 5 x 10
8	673062004	395714-45	Upper shaft bushing (rear)
9	650063004	395714-46	Upper shaft timing gear
10	650071005	395714-47	Timing belt
11	000030205	395714-48	Snap ring E-8
12	000036706	395714-49	Thrust washer 10-0.5
13	627568002	395714-50	Needle bar crank pin unit
14	627183009	395714-51	Needle bar crank pin
15	532041007	395714-52	Needle bar crank pin cap
16	820511005	395714-53	Thread take-up lever unit
17	650062003	395714-54	Thread take-up lever shaft
18	000001702	395714-55	Snap ring E-6
19	650609503	395714-56	Balance wheel unit
20	650064500	395714-57	Balance wheel
21	650065006	395714-58	Clutch pin
22	650066007	395714-59	Clutch pin spring
23	650067503	395714-60	Clutch knob
24	650068009	395714-61	Clutch spring
25	000107307	395710-64	Tapping screw 3 x 8 (B)
26	000036201	395712-37	Thrust washer 8-0.5
27	650174009	395714-62	Washer
28	810346006	395714-63	Cam shaft screw
29	650070509	395714-64	Clutch

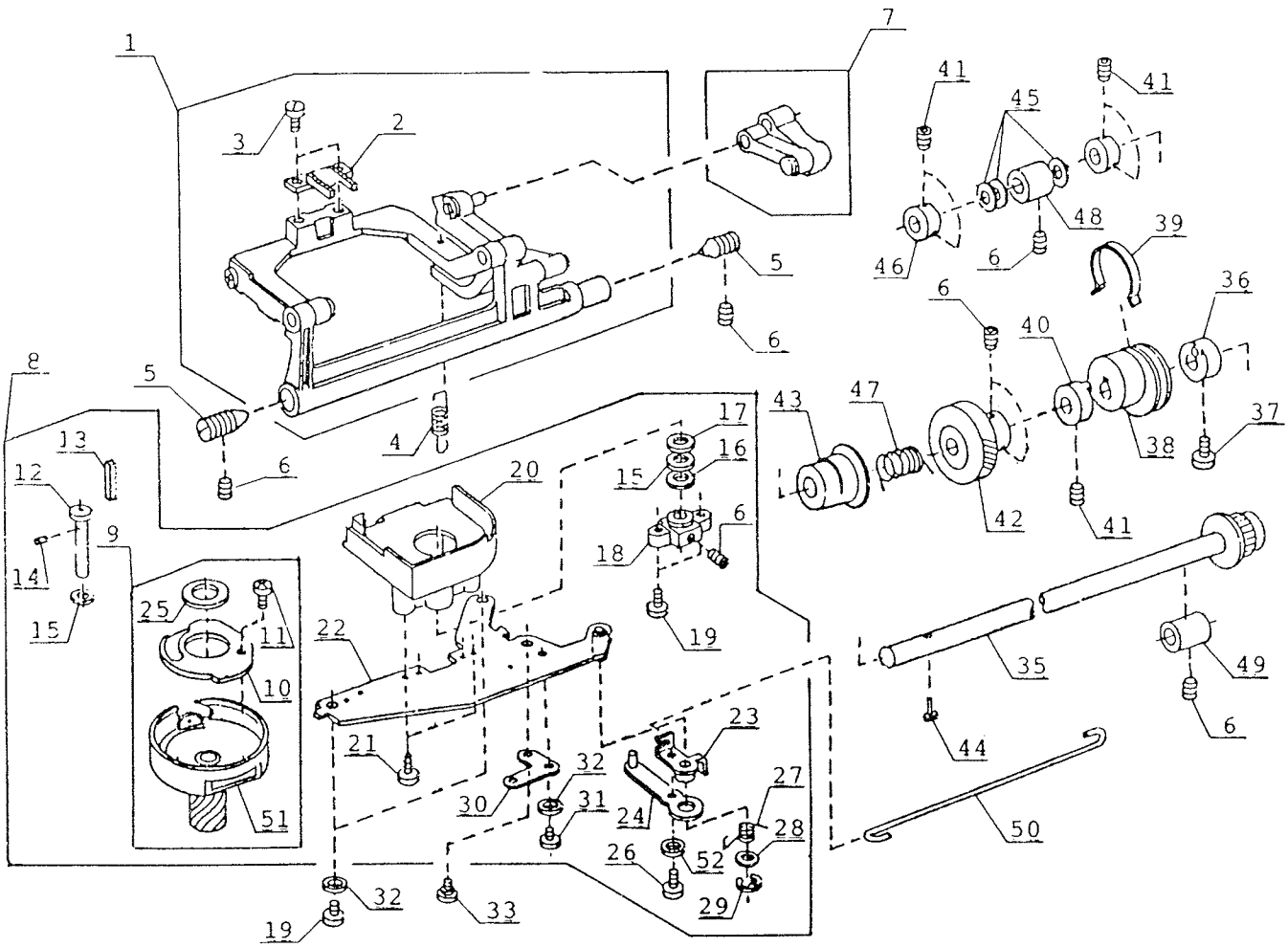
1
2
3
4
5
6
7
8
9
10
11
12
13
14
15
16
17
18
19
20
21
22
23
24
25
26
27
28
29
30
31
32
33
35
36
37
38
39
40
41
42
43
44
45
46
47
48
49
50
51
52

3002 - 3004

No.	Part No.	Tavaro No.	Designation
1	652620001	395714-65	Feed rock shaft unit
2	652109009	395714-66	Feed dog
3	614025002	395714-67	Set screw
4	650085002	395714-68	Feed bar spring
5	532030003	395714-69	Screw center
6	000111304	395711-25	Hexagon socket screw 5 x 5
7	650612004	395714-70	Feed regulator unit
8	650614006	395714-71	Hook unit complete
9	652623004	395714-72	Hook unit
10	627191000	395714-73	Hook bottom plate
11	820374004	395713-20	Set screw 2 x 2.3
12	820123006	395714-74	Hock shaft
13	820124007	395714-75	Hook shaft oil felt (1)
14	820125008	395714-76	Hook shaft oil felt (2)
15	000036500	395714-77	Thrust washer 6-0.5
16	625102008	395714-78	Plain washer
17	627192001	395714-79	Hook shaft washer
18	650094004	395714-80	Hook shaft base
19	000081005	395710-42	Set screw 4 x 8
20	650095005	395714-81	Hook race cover
21	000107204	395714-82	Tapping screw 3 x 12 (B)
22	650096006	395714-83	Hook holder plate
23	650097007	395714-84	Feed shift arm
24	650098008	395714-85	Feed shift plate
25	627190009	395714-86	Hook magnet
26	000103808	395711-06	Set screw 3 x 5
27	650099009	395714-87	Feed shift spring
28	650023002	395714-88	Plain washer
29	000002105	395711-03	Snap ring E-3
30	650171006	395714-89	Positioning plate
31	000101404	395710-38	Set screw 4 x 6
32	000070506	395714-23	Plain washer 4
33	650172007	395714-90	Hinge screw
35	686613006	395714-91	Lower shaft unit
36	650074008	395714-92	Forward feed cam ring
37	000121606	395714-93	Tapping screw 3 x 12 (S)
38	625120105	395714-94	Feed cam
39	627207000	395714-95	Feed cam spring
40	625118007	395714-96	Feed cam ring
41	000111201	395712-14	Hexagon socket screw 4 x 4
42	650076000	395714-97	Lower shaft gear
43	686036102	395714-98	Feed lifting cam
44	820161006	395714-99	Feed lifting pin
45	000036201	395712-37	Thrust washer 8-0.5
46	820166001	395715-00	Ring
47	686035008	395715-01	Feed lifting cam spring
48	650078002	395715-02	Lower shaft bushing (front)
49	650079003	395715-03	Lower shaft bushing (rear)
50	650101005	395715-04	Feed shift rod
51	652515002	395715-05	Hook body unit
52	656159006	395715-06	Plain washer 3.3

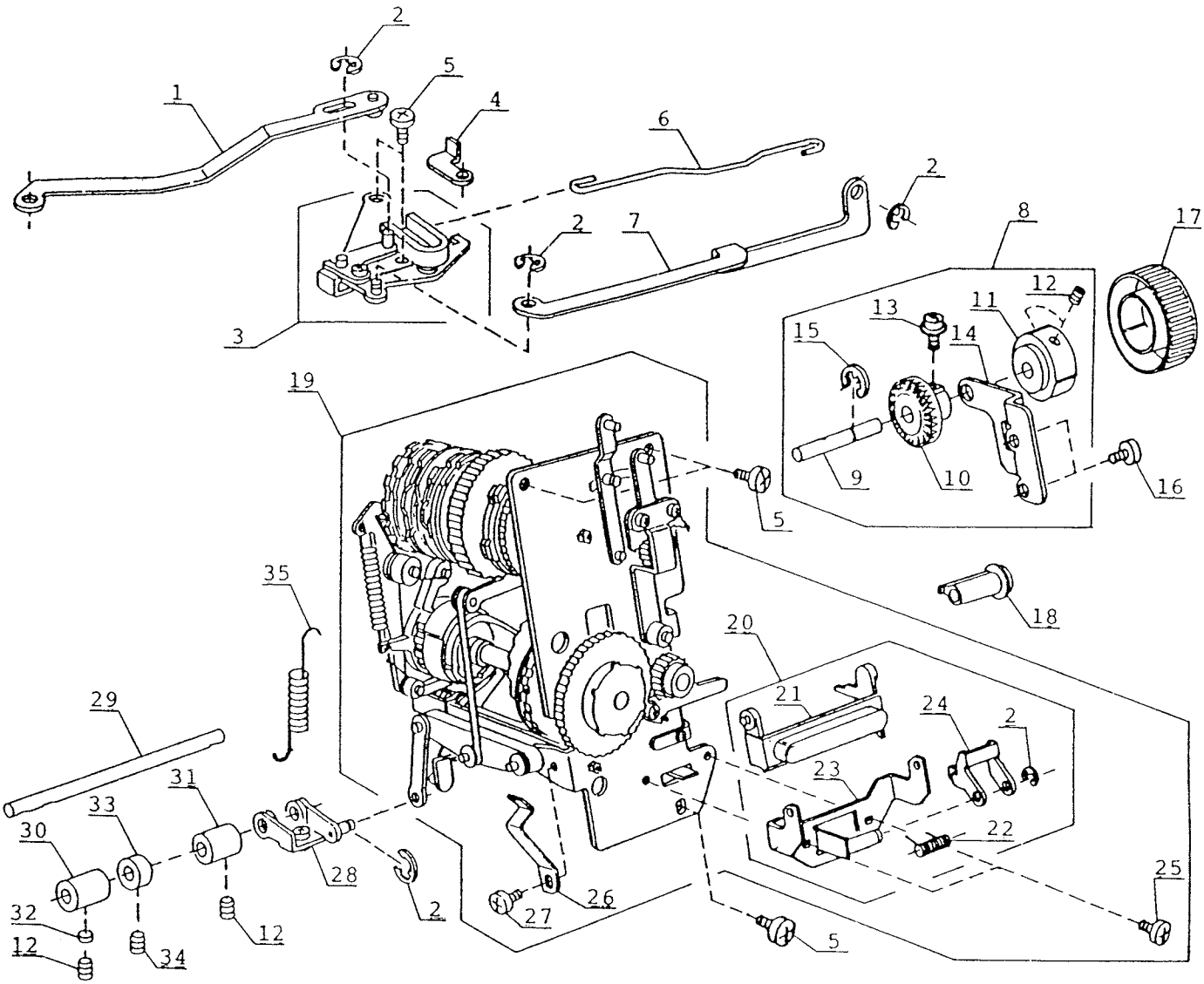
2
5
1
4
6
2
2
7
8
17
12
13
11
15
14
3
19
9
10
16
5
35
18
20
29
21
24
2
31
23
33
30
22
28
25
2
26
32
27
5
12
34
12

3002 - 3004

No.	Part No.	Tavaro No.	Designation
1	650156005	395715-07	Zigzag width rod (front)
2	000002105	395711-03	Snap ring E-3
3	686618001	395715-08	Zigzag width crank unit
4	688003003	395715-09	Zigzag stopper
5	000081005	395710-42	Set screw 4 x 8
6	688004004	395715-10	Zigzag width rod
7	753084003	395715-11	Zigzag width adjusting rod
8	753647000	395715-12	Pattern selector dial shaft unit
9	753203000	395715-13	Pattern selector dial shaft
10	753082001	395715-14	Dial gear
11	753202009	395715-15	Pattern selector dial seat
12	000111201	395712-14	Hexagon socket screw 4 x 4
13	000115009	395715-16	TP screw 3 x 8
14	753083002	395715-17	Dial supporter
15	000001609	395710-96	Snap ring E-5
16	000101404	395710-38	Set screw 4 x 6
17	753201008	395715-18	Pattern selector dial
18	650162406	395715-19	SS adjusting knob
19	753623000	395715-20	Control mechanism block unit (3002)
	753630000	395715-21	Control mechanism block unit (3004)
20	753611005	395715-22	R button unit
21	753047004	395715-23	R button
22	753147005	395715-24	R button spring
23	753046003	395715-25	R button supporter
24	753150001	395715-26	R button arm (2)
25	000103808	395711-06	Set screw 3 x 5
26	753061004	395715-27	Pattern selector index spring
27	000101105	395713-96	Set screw 3 x 4
28	652607002	395715-28	Feed regulating arm unit
29	650091001	395715-29	Feed shaft
30	625144002	395715-30	Feed shaft bushing (front)
31	650092002	395715-31	Feed shaft bushing (rear)
32	650175000	395715-32	Screw stopper plate
33	820387000	395715-33	Ring
34	000111108	395714-39	Hexagon socket screw 4 x 6
35	753033007	395715-34	Regulator spring

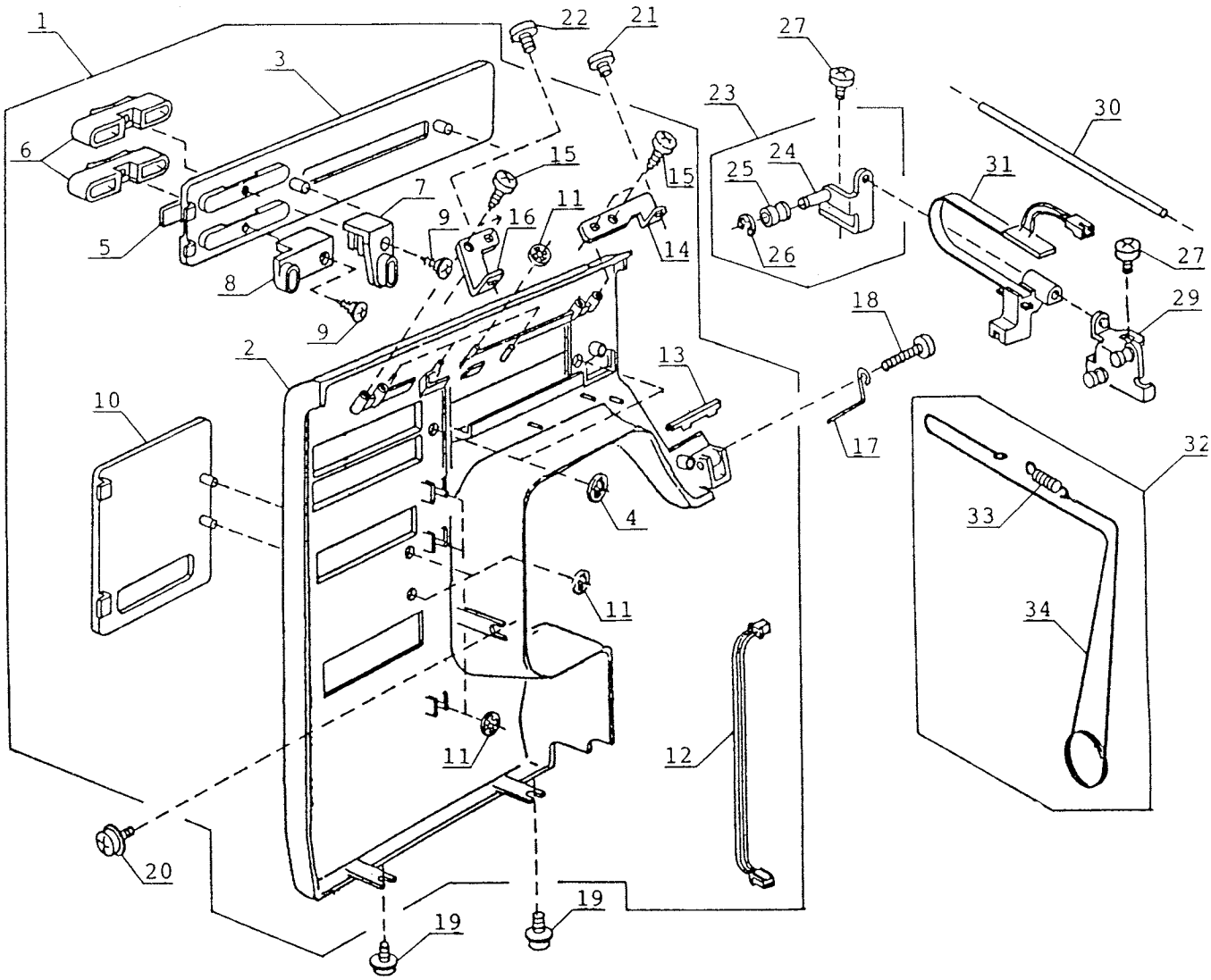
1
3
6
5
7
8
9
9
15
16
11
22
21
15
14
27
23
24
25
26
30
31
27
29
18
17
2
13
10
4
11
11
12
20
19
19
32
33
34

3002

No.	Part No.	Tavaro No.	Designation
1	753656105	395715-35	Front panel unit
2	753100023	395715-36	Front panel
3	753241103	395715-37	Pattern indication plate
4	000014007	395712-07	Snap ring CS-4
5	753240205	395715-38	Band plate
6	753103009	395715-39	Slide button
7	753104000	395715-40	Zigzag width adjusting slider
8	753105001	395715-41	Stitch length adjusting slider
9	000163105	395715-42	Tapping screw 2.3 x 5
10	753156605	395715-43	R button frame
11	000014306	395710-49	Snap ring CS-3
12	753529005	395715-44	Junction cable unit
13	753125007	395715-45	Thread protector
14	753108004	395715-46	Front panel retaining plate (front)
15	000120203	395713-65	Tapping screw 3 x 8 (B)
16	753109005	395715-47	Front panel retaining plate (rear)
17	753126008	395715-48	Arm thread guide
18	000093608	395715-49	Set screw 3.5 x 30
19	000115205	395710-41	TP screw 4 x 6
20	000115607	395715-50	TP screw 4 x 8
21	000101105	395713-96	Set screw 3 x 4
22	000081005	395710-42	Set screw 4 x 8
23	753616000	395715-51	Indicator guide holder unit (front)
24	753110009	395715-52	Indicator guide holder (front)
25	652099005	395715-53	Guide roller
26	000001207	395713-99	Snap ring E-2.5
27	000101404	395710-38	Set screw 4 x 6
29	753111000	395715-54	Indicator guide holder (rear)
30	753112001	395715-55	Indicator guide
31	753512005	395715-56	Flexible circuit board unit
32	753618002	395715-57	Indicator string unit
33	818033001	395715-58	Spring
34	753113002	395715-59	Indicator string
35	741032102	395710-48	"elna" mark

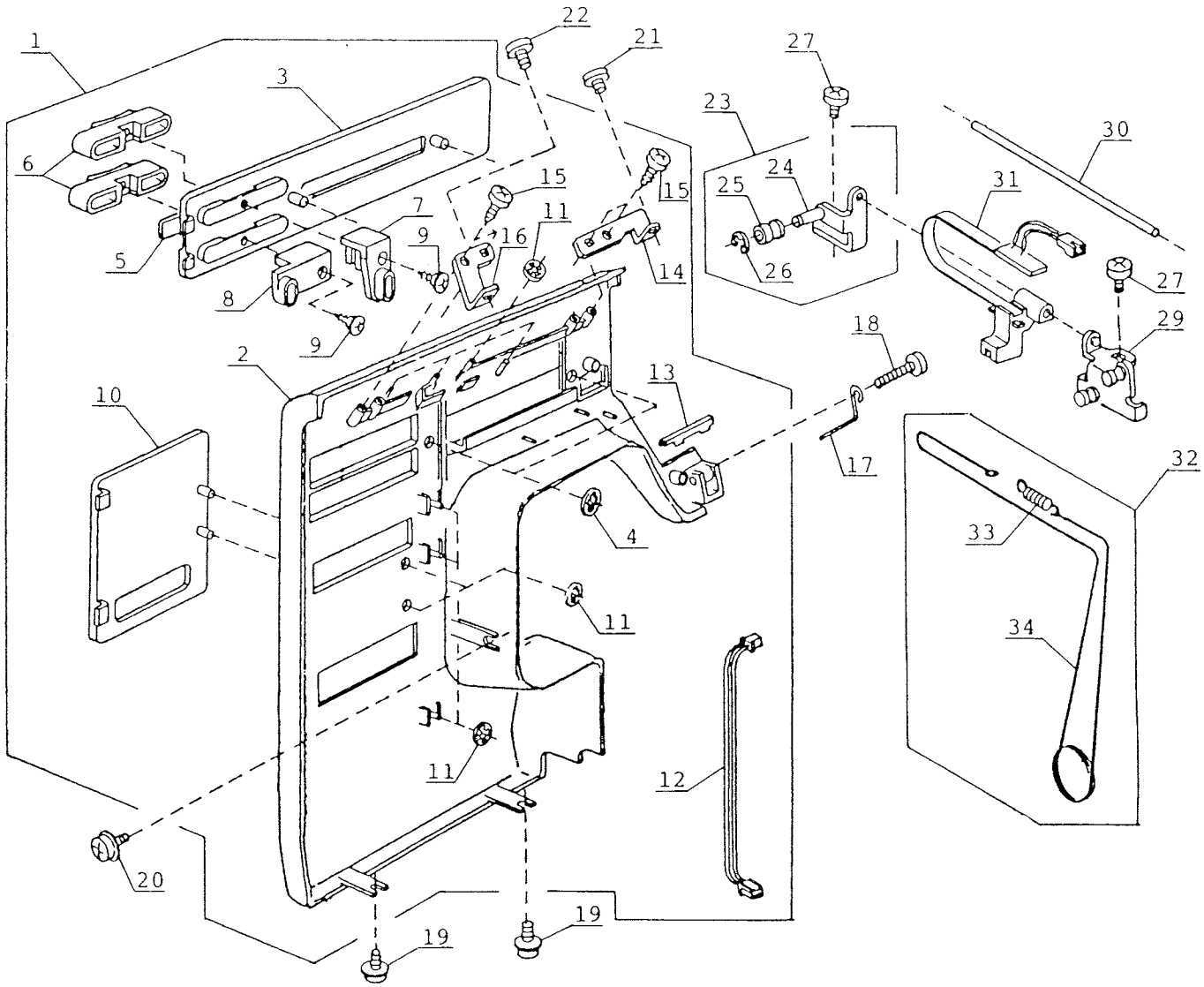
1
2
3
4
5
6
7
8
9
9
10
11
11
11
12
13
14
15
15
16
17
18
19
19
20
21
22
23
24
25
26
27
27
29
30
31
32
33
34

3004

No.	Part No.	Tavaro No.	Designation
1	753656002	395715-60	Front panel unit
2	753100023	395715-36	Front panel
3	753241000	395715-61	Pattern indication plate
4	000014007	395712-07	Snap ring CS-4
5	753240102	395715-62	Band plate
6	753103009	395715-39	Slide button
7	753104000	395715-40	Zigzag width adjusting slider
8	753105001	395715-41	Stitch length adjusting slider
9	000163105	395715-42	Tapping screw 2.3 x 5
10	753156605	395715-43	R button frame
11	000014306	395710-49	Snap ring CS-3
12	753529005	395715-44	Junction cable unit
13	753125007	395715-45	Thread protector
14	753108004	395715-46	Front panel retaining plate (front)
15	000120203	395713-65	Tapping screw 3 x 8 (8)
16	753109005	395715-47	Front panel retaining plate (rear)
17	753126008	395715-48	Arm thread guide
18	000093608	395715-49	Set screw 3.5 x 30
19	000115205	395710-41	TP screw 4 x 6
20	000115607	395715-50	TP screw 4 x 8
21	000101105	395713-96	Set screw 3 x 4
22	000081005	395710-42	Set screw 4 x 8
23	753616000	395715-51	Indicator guide holder unit (front)
24	753110009	395715-52	Indicator guide holder (front)
25	652099005	395715-53	Guide roller
26	000001207	395713-99	Snap ring E-2.5
27	000101404	395713-38	Set screw 4 x 6
29	753111000	395715-54	Indicator guide holder (rear)
30	753112001	395715-55	Indicator guide
31	753512005	395715-56	Flexible circuit board unit
32	753618002	395715-57	Indicator string unit
33	818033001	395715-58	Spring
34	753113002	395715-59	Indicator string
35	741032102	395710-48	"elna" mark

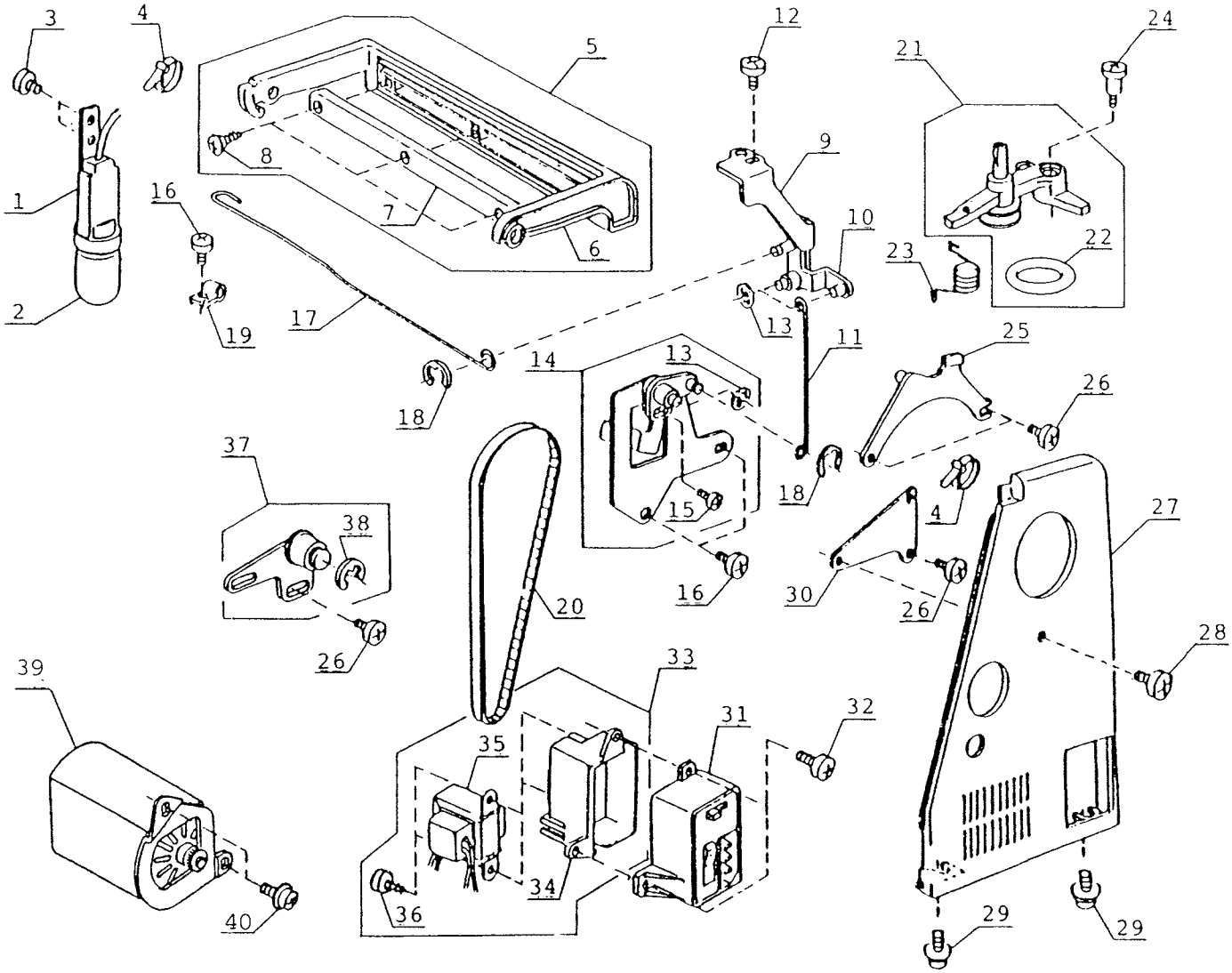
3
4
5
12
24
21
1
8
9
16
7
10
6
23
22
2
19
17
13
11
25
14
13
26
18
37
18
4
38
15
27
16
30
20
26
26
28
39
33
31
32
35
34
36
40
29
29

3002 - 3004 120V

No.	Part No.	Tavaro No.	Designation
1	686504003	395715-63	Lamp socket unit
2	000008606	395719-43	Light bulb 120 V/ 15W E12
3	000101105	395713-96	Set screw 3 x 4
4	000053008	395711-18	Binder
5	753620007	395715-65	Carrying handle unit
6	753121003	395715-66	Carrying handle
7	753122004	395715-67	Carrying handle plate
8	000120502	395715-68	Tapping screw 3 x 8 (B)
9	753117006	395715-69	Drag rod link holder plate
10	753118007	395715-70	Drag rod link
11	753099001	395715-71	BH drag rod (2)
12	810220003	395713-27	Set screw
13	000014007	395712-07	Snap ring CS-4
14	753614008	395715-72	Step-up base unit
15	000101507	395715-73	Set screw 3.5 x 5
16	000101404	395710-38	Set screw 4 x 6
17	753098000	395715-74	BH drag rod
18	000002105	395711-03	Snap ring E-3
19	000126106	395715-75	Nylon clip SL-4N
20	650166008	395712-77	Timing belt
21	653508005	395715-76	Bobbin winder unit
22	365076007	395715-77	Rubber ring
23	810388000	395715-78	Bobbin winder frame spring
24	686063005	395715-79	Hinge screw
25	753120002	395715-80	Carrying handle supporter plate
26	000081005	395710-42	Set screw 4 x 8
27	753115004	395715-81	Belt cover
28	000101806	395715-82	Set screw 4 x 16
29	000115205	395710-41	TP screw 4 x 6
30	753116005	395715-83	Belt cover setting plate
31	687504202	395715-84	Machine socket unit
32	000101703	395711-12	Set screw 4 x 12
33	687603006	395715-85	Transformer unit
34	687013003	395715-86	Machine socket cover
35	687505007	395715-87	Transformer
36	000076317	395710-35	Set screw 3 x 10
37	753619003	395715-88	Idler unit
38	000002806	395711-34	Snap ring E-6
39	012893119	395715-89	Motor unit (USA)
	012893212	395715-90	Motor unit (Canada)
40	000115504	395712-76	Set screw

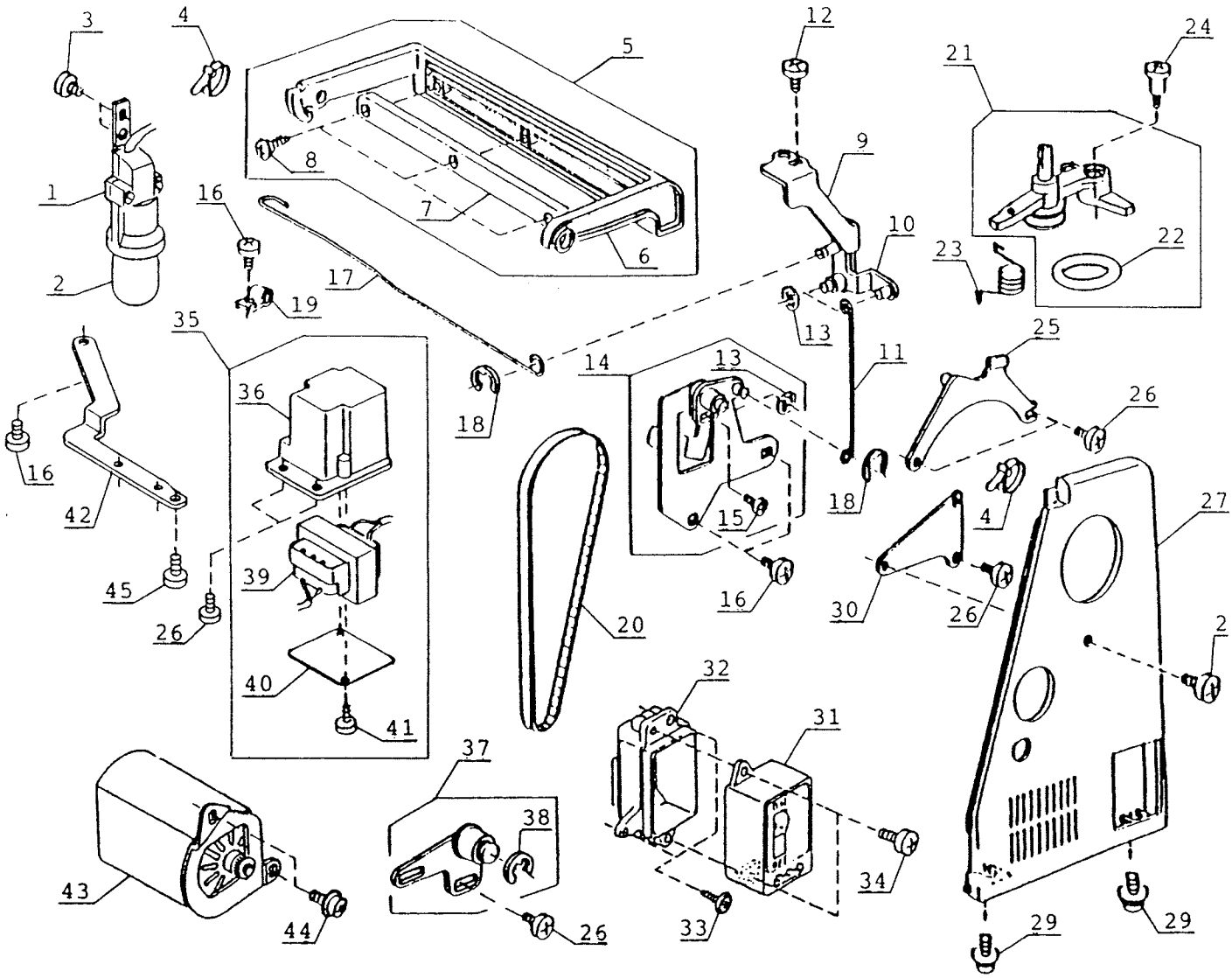
3
4
5
12
24
21
1
8
9
16
7
10
22
23
2
6
17
19
13
35
25
14
13
11
36
18
26
16
42
15
18
4
27
39
45
16
30
26
26
20
2
40
32
41
31
37
38
43
34
44
26
33
29
29

3002 - 3004 230V

No.	Part No.	Tavaro No.	Designation
1	686508007	395715-91	Lamp socket unit
2	000009009	395710-04	Light bulb 230V/15W BA15D
3	000101105	395713-96	Set screw 3 x 4
4	000053008	395711-18	Binder
5	753620007	395715-65	Carrying handle unit
6	753121003	395715-66	Carrying handle
7	753122004	395715-67	Carrying handle plate
8	000120502	395715-68	Tapping screw 3 x 8 (B)
9	753117006	395715-69	Drag rod link holder plate
10	753118007	395715-70	Drag rod link
11	753099001	395715-71	BH drag rod (2)
12	810220003	395713-27	Set screw
13	000014007	395712-07	Snap ring CS-4
14	753614008	395715-72	Step-up base unit
15	000101507	395715-73	Set screw 3.5 x 5
16	000101404	395710-38	Set screw 4 x 6
17	753098000	395715-74	BH drag rod
18	000002105	395711-03	Snap ring E-3
19	000126106	395715-75	Nylon clip SL-4N
20	650166008	395712-77	Timing belt
21	653508005	395715-76	Bobbin winder unit
22	365076007	395715-77	Rubber ring
23	810388000	395715-78	Bobbin winder frame spring
24	686063005	395715-79	Hinge screw
25	753120002	395715-80	Carrying handle supporter plate
26	000081005	395710-42	Set screw 4 x 8
27	753115004	395715-81	Belt cover
28	000101806	395715-82	Set screw 4 x 16
29	000115205	395710-41	TP screw 4 x 6
30	753116005	395715-83	Belt cover setting plate
31	687502107	395716-57	Machine socket unit
32	687008005	395715-92	Machine socket cover
33	000075604	395713-40	Set screw 4 x 12
34	000101703	395711-12	Set screw 4 x 12
35	687602005	395715-93	Transformer unit, complete
36	687009006	395715-94	Transformer case
37	753619003	395715-88	Idler unit
38	000002806	395711-34	Snap ring E-6
39	687503005	395715-95	Transformer unit
40	687010000	395715-96	Transformer cover
41	000076317	395710-35	Set screw 3 x 10
42	753159000	395715-97	Transformer setting plate
43	M-2092	395715-98	Motor unit 230V
44	000115504	395712-76	TP screw 5 x 10
45	000101208	395715-99	Set screw 5 x 6

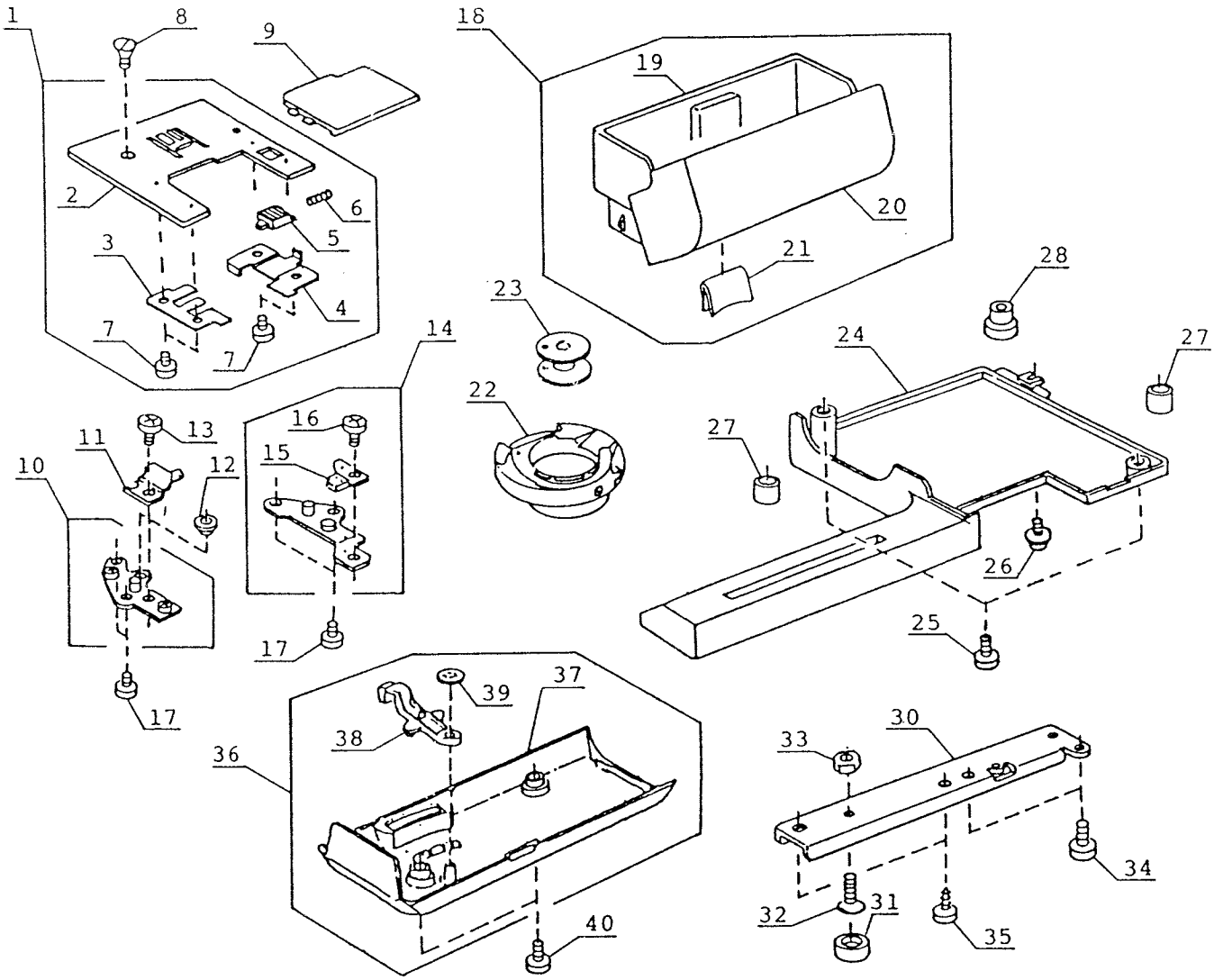
1
8
9
2
6
5
3
4
7
7
14
16
15
11
13
12
10
17
17
18
19
20
21
23
22
28
24
27
27
26
25
39
37
38
36
40
33
30
34
32
31
35

3006

No.	Part No.	Tavaro No.	Designation
1	753603004	395713-14	Needle plate unit complete
2	753501001	395713-15	Needle plate unit
3	825014008	395713-16	Slide plate holder (left)
4	825015010	395713-17	Slide plate holder (right)
5	825016000	395713-18	Slide plate release button
6	825017001	395713-19	Slide plate release button spring
7	820374004	395713-20	Set screw 2 x 2.3
8	820390109	395713-21	Set screw
9	825018013	395719-01	Slide plate
10	650602001	395713-22	Needle plate supporter unit (left)
11	822011109	395713-23	Pawl plate
12	822314002	395713-24	Nut
13	000103808	395711-06	Set screw 3 x 5
14	650603002	395713-25	Needle plate supporter unit (right)
15	627567001	395713-26	Bobbin holder stopper unit
16	810220003	395713-27	Set screw
17	000107503	395713-28	Tapping screw 4 x 6
18	753526002	395713-29	Extension table unit
19	753006001	395713-30	Extension table
20	753007002	395713-31	Extension table lid
21	686010007	395713-32	Extension table spring
22	627569106	395713-33	Bobbin holder unit
23		494430	Bobbin
24	753003008	395713-34	Base
25	000081005	395710-42	Set screw 4 x 8
26	000115205	395710-41	TP screw 4 x 6
27	647009002	395713-35	Bed rubber seat
28	735003002	395713-36	Rubber foot
30	753002007	395713-37	Arm sole
31	735002001	395710-76	Rubber seat
32	000097302	395713-38	Set screw
33	000061319	395710-78	Hexagon nut 5-1-8
34	000066808	395713-39	Set screw 6 x 14
35	000075604	395713-40	Set screw 4 x 12
36	753601002	395713-41	Bed cover unit
37	652005107	395713-42	Bed cover
38	753005000	395713-43	Drop lever
39	000013903	395710-98	Snap ring CS-5
40	000101703	395711-12	Set screw 4 x 12
1a	754636009	395735-09	Needle plate (new version)

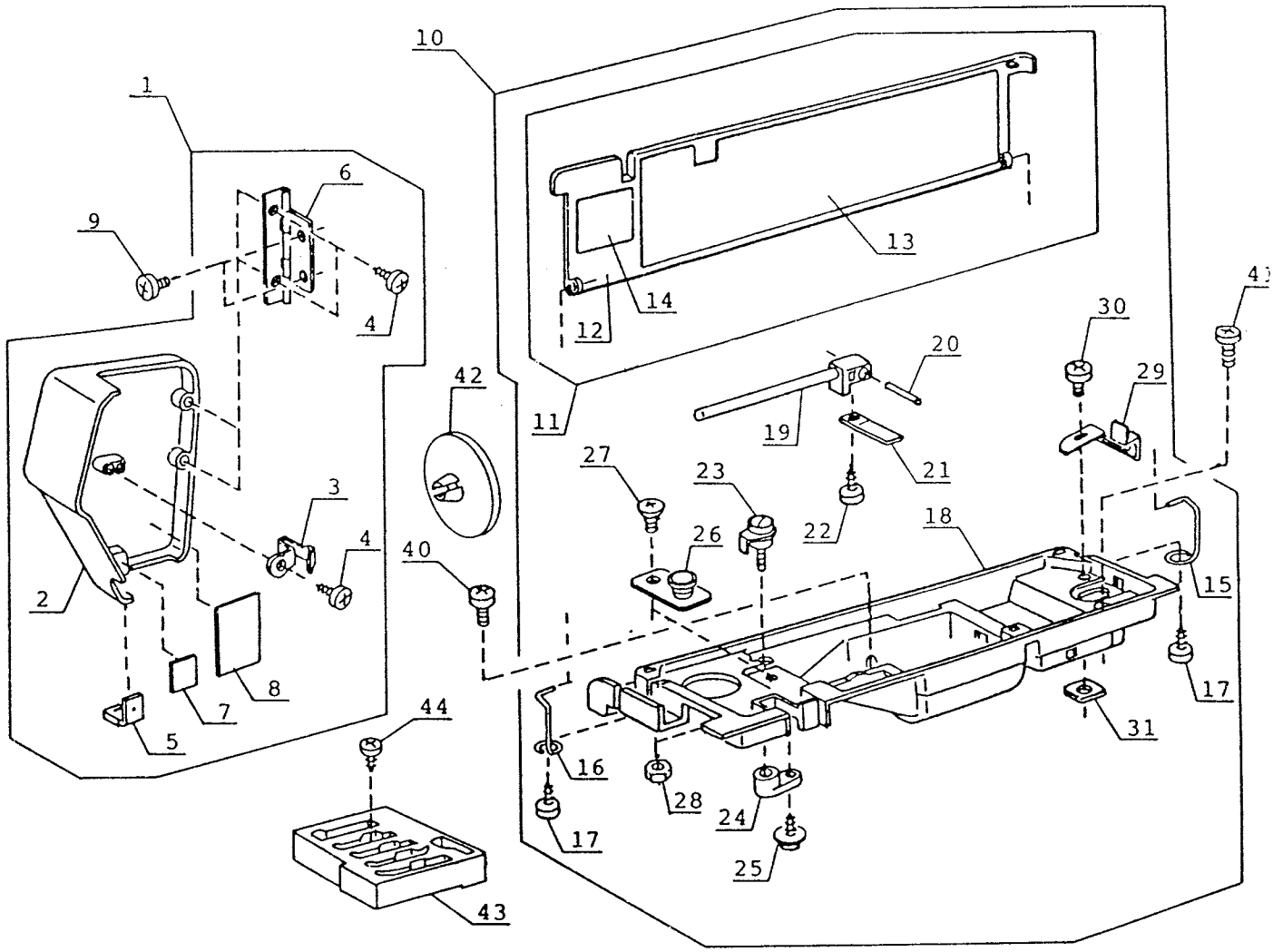
10
1
6
9
4
13
14
12
11
42
20
30
29
19
21
27
23
22
18
3
4
40
26
15
2
8
7
5
17
31
44
16
28
24
17
25
43

3006

No.	Part No.	Tavaro No.	Designation
1	753606708	395716-00	Face plate unit
2	753017500	395713-47	Face plate
3	650025004	395713-48	Face plate spring
4	000076502	395713-49	Set screw 3 x 8
5	822532008	395710-69	Thread cutter unit
6	366501102	395713-50	Face plate hinge unit
7	724024005	395713-51	Reflecting plate (1)
8	724025006	395713-52	Reflecting plate (2)
9	000081119	395713-53	Set screw 4 x 6
10	753604407	395716-01	Top cover unit, complete
11	753605501	395716-02	Top cover unit
12	753012000	395713-58	Top cover
13	753237003	395716-03	Flip-top sewing instruction panel
14	753238004	395716-04	BH sticker
15	753014002	395713-63	Hinge rod (right)
16	753129001	395713-64	Hinge rod (left)
17	000120203	395713-65	Tapping screw 3 x 8 (B)
18	753015106	395713-66	Top cover body
19	822016403	395713-67	Spool pin
20	822017002	395713-68	Pin
21	822018003	395713-69	Spring
22	000107318	395713-70	Tapping screw 3 x 8 (B)
23	730501000	395710-50	Bobbin winder thread guide unit
24	822021009	395713-71	Thread guide holder
25	000149002	395713-72	Set screw 3 x 10
26	753502002	395713-73	Top cover thread guide holder unit
27	693093006	395713-74	Set screw
28	000062701	395713-75	Hexagon nut 3.5-3-6
29	687022005	395713-76	Bobbin winder stopper
30	000066727	395713-77	Set screw 3 x 8
31	630005006	395713-78	Nut
40	000170507	395713-79	Set screw 4 x 12
41	000080901	395713-80	Set screw 4 x 25
42	822020307	395713-81	Spool holder (large)
43	686016209	395713-82	Foot container
44	000120214	395713-83	Tapping screw 3 x 8 (B)

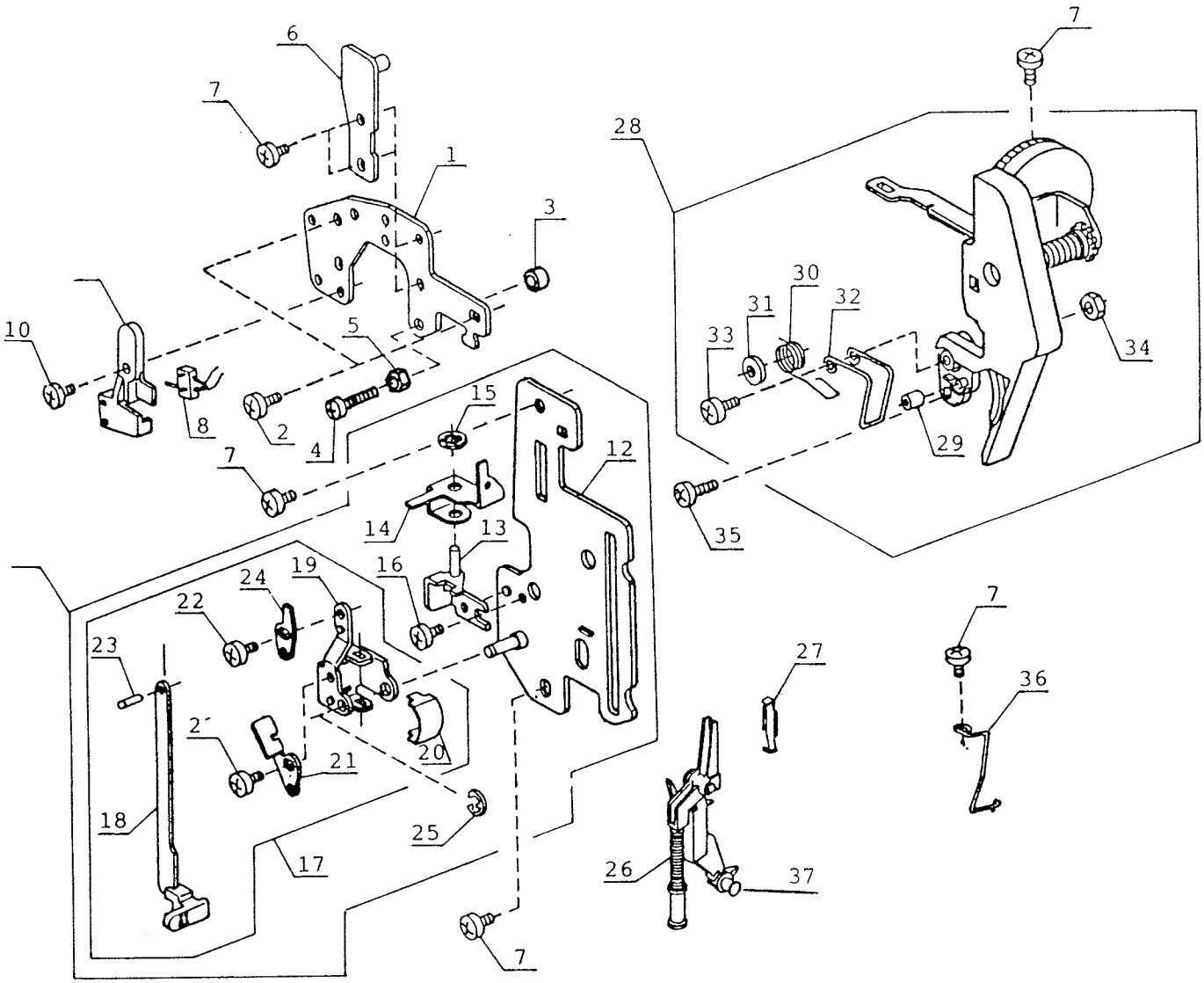
6
7
1
3
10
5
2
4
8
7
15
12
14
13
16
19
24
22
23
21
18
17
25
7
28
7
30
31
32
33
34
29
35
27
7
36
26
37

3006

No.	Part No.	Tavaro No.	Designation
1	753019007	395713-84	Lamp socket holder plate
2	000081005	395710-42	Set screw 4 x 8
3	685042005	395713-85	Supporter stopper
4	000104809	395713-86	Set screw 4 x 35
5	000160102	395710-51	Adjustable nut 4
6	686059008	395713-87	Handle supporter plate
7	000101404	395710-38	Set screw 4 x 6
8	753504004	395716-05	BH limit switch unit
9	753134009	395716-06	Switch holder
10	000078319	395716-07	Set screw 3 x 6
11	753625002	395713-88	Front base plate unit
12	753022003	395713-89	Front base plate
13	753023004	395713-90	Drag rod link holder (front)
14	753024005	395713-91	Drag rod link (front)
15	000014007	395712-07	Snap ring CS-4
16	000081119	395713-53	Set screw 4 x 6
17	753608009	395716-08	BH lever unit
18	753629006	395713-93	BH lever
19	753026007	395713-94	BH lever supporter
20	753027008	395713-95	Friction spring
21	753028009	395716-09	Switch adjusting plate
22	000101105	395713-96	Set screw 3 x 4
23	000023009	395713-97	Spring pin 1.6 x 4
24	753029000	395713-98	BH lever adjusting plate
25	000001207	395713-99	Snap ring E-2.5
26	822510000	395714-00	Threader unit
27	625084003	395714-01	Spring
28	753503003	395714-02	Thread tension dial unit
29	650043008	395714-03	Check spring cushion
30	652038006	395714-04	Check spring
31	652039007	395711-11	Washer
32	652037005	395714-05	Thread guide
33	000104304	395714-06	Set screw 3 x 14
34	000060857	395714-07	Hexagon nut 3-1-5.5
35	000101703	395711-12	Set screw 4 x 12
36	652137006	395714-08	Arm thread guide (2)
37	627170003	395714-09	Threader pin

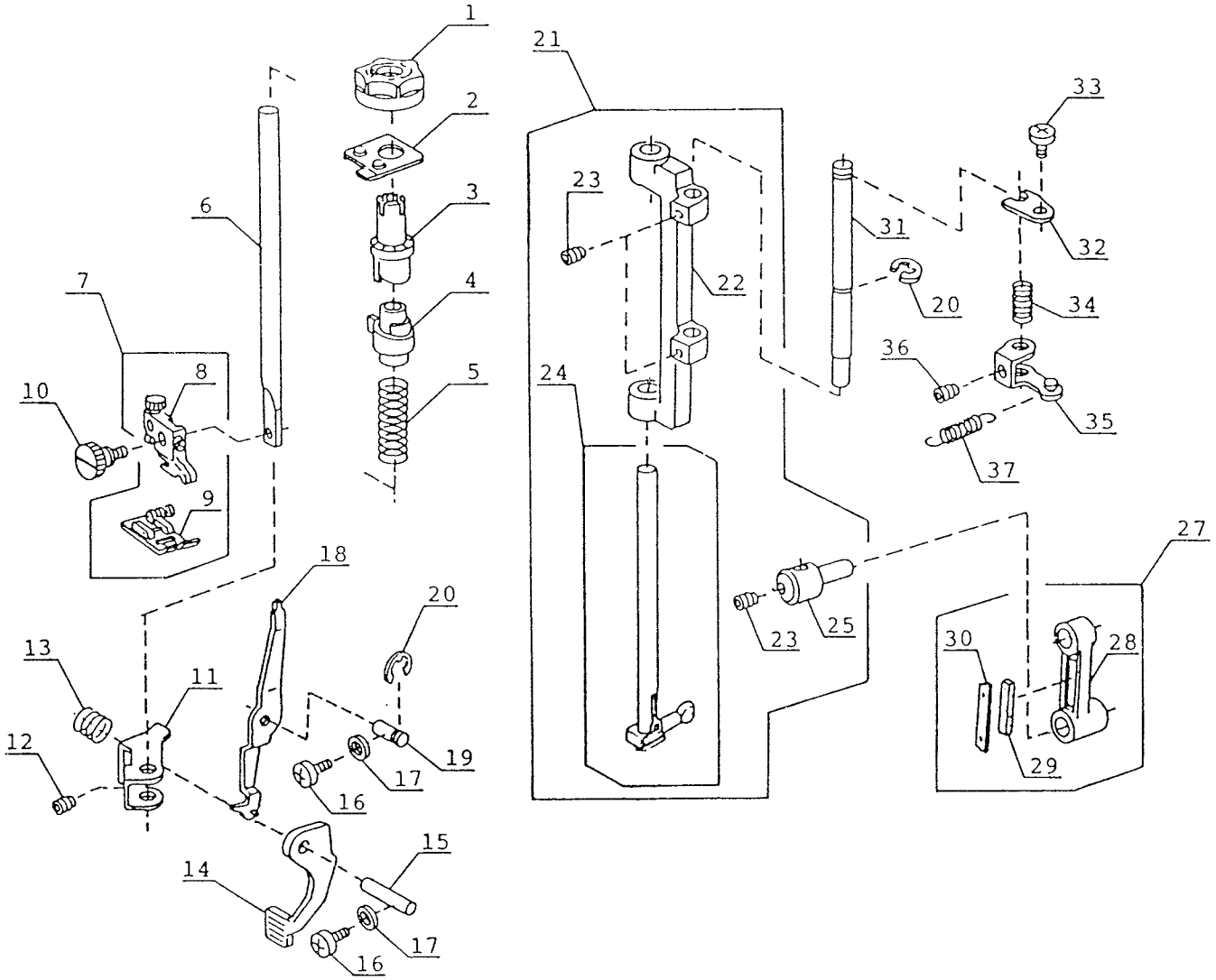
1
2
3
4
5
6
7
8
9
10
11
12
13
14
15
16
17
18
19
20
21
22
23
24
25
27
28
29
30
31
32
33
34
35
36
37

3006

No.	Part No.	Tavaro No.	Designation
1	822065005	395714-10	Pressure dial
2	824009007	395714-11	Pressure adjusting cam holder
3	686027007	395714-12	Pressure adjusting cam (1)
4	686028008	395714-13	Pressure adjusting cam (2)
5	815023009	395714-14	Presser bar spring
6	102801008	395714-15	Presser bar
7	822525008	395714-16	Presser foot unit
8	804509000	395714-17	Foot holder unit
9	825510032	395719-29	Zigzag foot unit
10	102012004	395714-18	Thumb screw
11	686074009	395714-19	Presser bar bracket
12	000111500	395710-94	Hexagon socket screw 4 x 8
13	102222009	395714-20	Darner spring
14	652145007	395714-21	Presser foot lifter
15	822072005	395714-22	Presser foot lifter pin
16	000103509	395712-61	Set screw 4 x 10
17	000070506	395714-23	Plain washer 4
18	652146008	395714-24	Thread tension release lever
19	652042003	395714-25	Thread tension release lever pin
20	000001609	395710-96	Snap ring E-5
21	686611004	395714-26	Needle bar supporter unit
22	650038000	395714-27	Needle bar supporter
23	000111201	395712-14	Hexagon socket screw 4 x 4
24	822658xxx	395714-28	Needle bar unit
25	650100004	395714-29	Needle bar connecting stud
27	686612005	395714-31	Needle bar crank rod unit
28	625226009	395714-32	Needle bar crank rod
29	650040005	395714-33	Felt
30	650041006	395714-34	Felt holder spring
31	650033005	395714-35	Needle bar supporter shaft
32	650034006	395714-36	Needle bar supporter shaft holder plate
33	000101404	395710-38	Set screw 4 x 6
34	650036008	395714-37	Needle bar supporter shaft spring
35	650035007	395714-38	Zigzag width crank
36	000111108	395714-39	Hexagon socket screw 4 x 6
37	686085003	395714-40	Needle bar supporter spring

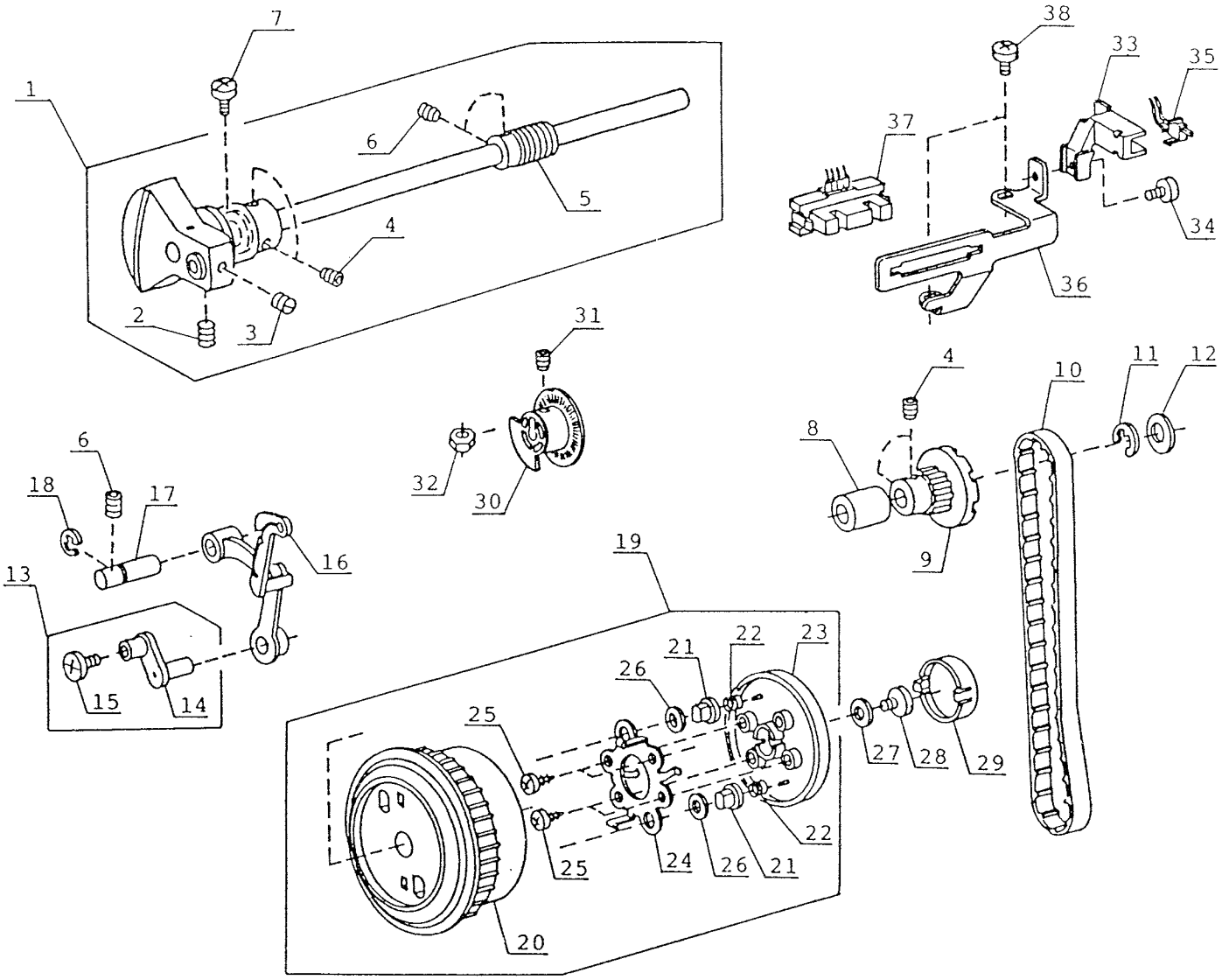
1
2
3
4
5
6
7
38
33
35
37
34
36
31
32
30
6
18
17
16
13
15
14
4
8
10
11
12
9
19
21
22
23
26
25
27
28
29
24
20

3006

No.	Part No.	Tavaro No.	Designation
1	686623009	395714-41	Upper shaft unit
2	102073003	395714-42	Set screw
3	102063000	395714-43	Set screw
4	000111304	395711-25	Hexagon socket screw 5 x 5
5	650060001	395714-44	Worm gear
6	000111201	395712-14	Hexagon socket screw 4 x 4
7	000101301	395711-57	Set screw 5 x 10
8	673062004	395714-45	Upper shaft bushing (rear)
9	650063004	395714-46	Upper shaft timing gear
10	650071005	395714-47	Timing belt
11	000030205	395714-48	Snap ring E-8
12	000036706	395714-49	Thrust washer 10-0.5
13	627568002	395714-50	Needle bar crank pin unit
14	627183009	395714-51	Needle bar crank pin
15	532041007	395714-52	Needle bar crank pin cap
16	820511005	395714-53	Thread take-up lever unit
17	650062003	395714-54	Thread take-up lever shaft
18	000001702	395714-55	Snap ring E-6
19	650609503	395714-56	Balance wheel unit
20	650064500	395714-57	Balance wheel
21	650065006	395714-58	Clutch pin
22	650066007	395714-59	Clutch pin spring
23	650067503	395714-60	Clutch knob
24	650068009	395714-61	Clutch spring
25	000107307	395710-64	Tapping screw 3 x 8 (B)
26	000036201	395712-37	Thrust washer 8-0.5
27	650174009	395714-62	Washer
28	810346006	395714-63	Cam shaft screw
29	650070509	395714-64	Clutch cap
30	753133101	395716-10	Shielding plate
31	000111108	395714-39	Hexagon socket screw 4 x 6
32	000061102	395716-11	Hexagon nut 4-1-7
33	753131006	395716-12	Switch holder
34	000078319	395716-07	Set screw 3 x 6
35	753505005	395716-13	Bobbin winder switch unit
36	753132007	395716-14	Sensor holder plate
37	735514104	395716-15	Photosensor unit
38	000101404	395710-38	Set screw 4 x 6

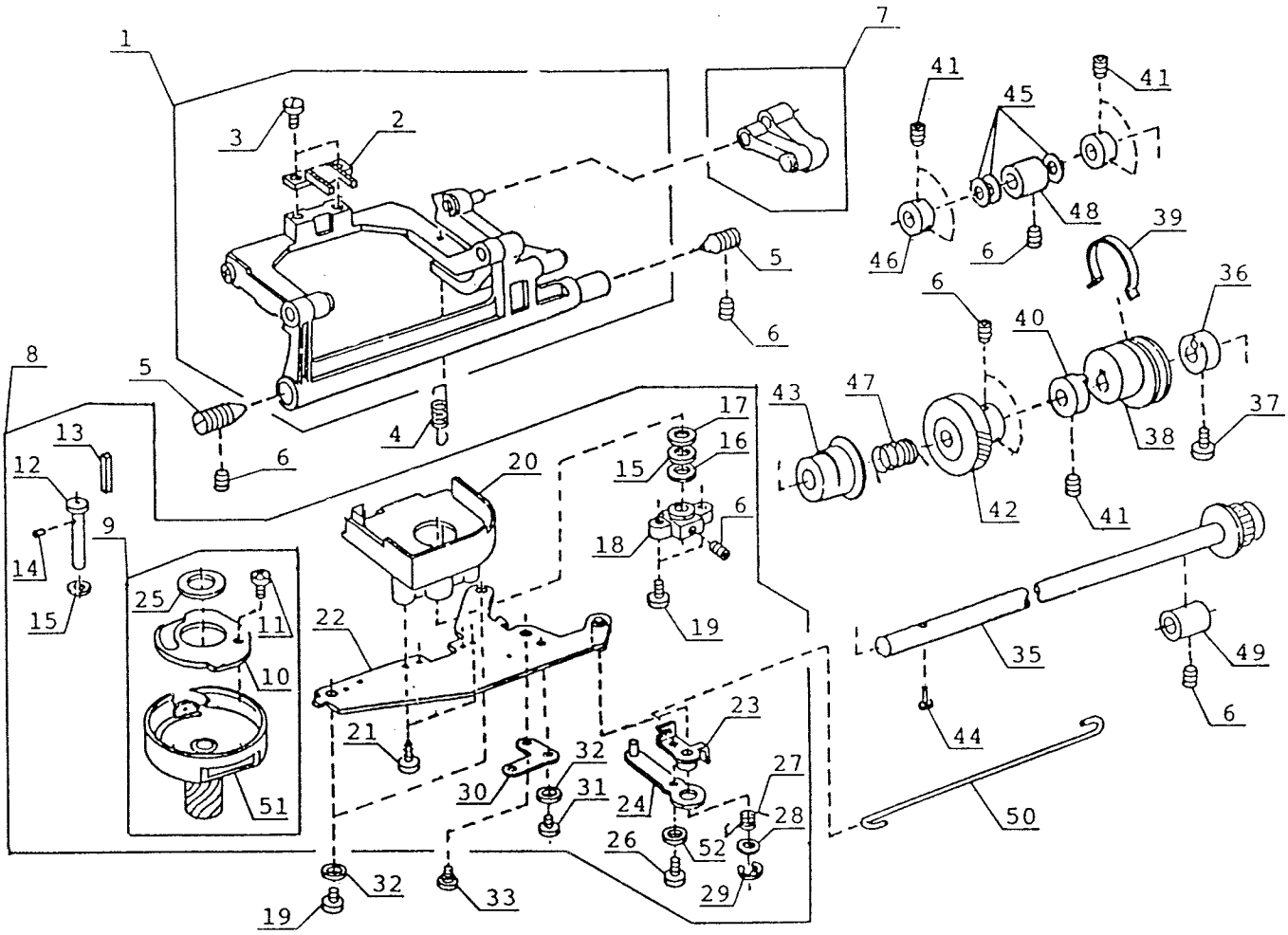
1
2
3
4
5
6
7
8
9
10
11
12
13
14
15
16
17
18
19
20
21
22
23
24
25
26
27
28
29
30
31
32
33
35
36
37
38
39
40
41
42
43
44
45
46
47
48
49
50
51
52

No.	Part No.	Tavaro No.	Designation
1	652620001	395714-65	Feed rock shaft unit
2	652109009	395714-66	Feed dog
3	614025002	395714-67	Set screw
4	650085002	395714-68	Feed bar spring
5	532030003	395714-69	Screw center
6	000111304	395711-25	Hexagon socket screw 5 x 5
7	650612004	395714-70	Feed regulator unit
8	650614006	395714-71	Hook unit, complete
9	652623004	395714-72	Hook unit
10	627191000	395714-73	Hook bottom plate
11	820374004	395713-20	Set screw 2 x 2.3
12	820123006	395714-74	Hook shaft
13	820124007	395714-75	Hook shaft oil felt (1)
14	820125008	395714-76	Hook shaft oil felt (2)
15	000036500	395714-77	Thrust washer 6-0.5
16	625102008	395714-78	Plain washer
17	627192001	395714-79	Hook shaft washer
18	650094004	395714-80	Hook shaft base
19	000081005	395710-42	Set screw 4 x 8
20	650095005	395714-81	Hook race cover
21	000107204	395714-82	Tapping screw 3 x 12 (B)
22	650096006	395714-83	Hook holder plate
23	650097007	395714-84	Feed shift arm
24	650098008	395714-85	Feed shift plate
25	627190009	395714-86	Hook magnet
26	000103808	395711-06	Set screw 3 x 5
27	650099009	395714-87	Feed shift spring
28	650023002	395714-88	Plain washer
29	000002105	395711-03	Snap ring E-3
30	650171006	395714-89	Positioning plate
31	000101404	395710-38	Set screw 4 x 6
32	000070506	395714-23	Plain washer 4
33	650172007	395714-90	Hinge screw
35	686613006	395714-91	Lower shaft unit
36	650074008	395714-92	Forward feed cam ring
37	000121606	395714-93	Tapping screw 3 x 12 (S)
38	625120105	395714-94	Feed cam
39	627207000	395714-95	Feed cam spring
40	625118007	395714-96	Feed cam ring
41	000111201	395712-14	Hexagon socket screw 4 x 4
42	650076000	395714-97	Lower shaft gear
43	686036102	395714-98	Feed lifting cam
44	820161006	395714-99	Feed lifting pin
45	000036201	395712-37	Thrust washer 8-0.5
46	820166001	395715-00	Ring
47	686035008	395715-01	Feed lifting cam spring
48	650078002	395715-02	Lower shaft bushing (front)
49	650079003	395715-03	Lower shaft bushing (rear)
50	650101005	395715-04	Feed shift rod
51	652515002	395715-05	Hook body unit
52	656159006	395715-06	Plain washer 3.3

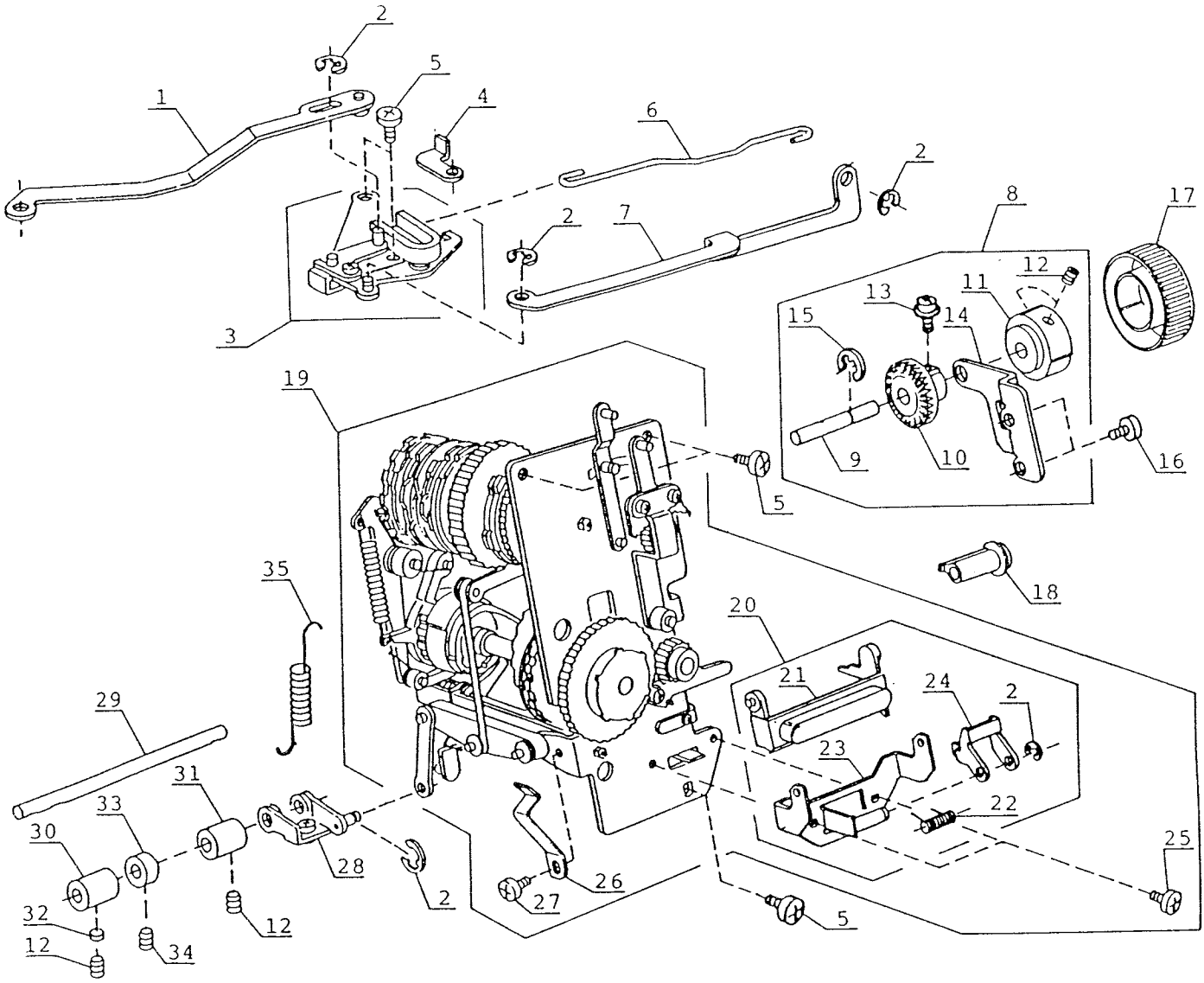
2
5
1
4
6
2
2
7
8
17
12
13
11
14
15
3
19
9
10
16
5
18
35
20
21
24
2
29
23
31
33
22
30
28
25
2
26
27
5
32
12
34
12

3006

No.	Part No.	Tavaro No.	Designation
1	650156005	395715-07	Zigzag width rod (front)
2	000002105	395711-03	Snap ring E-3
3	686618001	395715-08	Zigzag width crank unit
4	688003003	395715-09	Zigzag stopper
5	000081005	395710-42	Set screw 4 x 8
6	688004004	395715-10	Zigzag width rod
7	753084003	395715-11	Zigzag width adjusting rod
8	753647000	395715-12	Pattern selector dial shaft unit
9	753203000	395715-13	Pattern selector dial shaft
10	753082001	395715-14	Dial gear
11	753202009	395715-15	Pattern selector dial seat
12	000111201	395712-14	Hexagon socket screw 4 x 4
13	000115009	395715-16	TP screw 3 x 8
14	753083002	395715-17	Dial supporter
15	000001609	395710-96	Snap ring E-5
16	000101404	395710-38	Set screw 4 x 6
17	753201008	395715-18	Pattern selector dial
18	650162406	395715-19	SS adjusting knob
19	753610004	395716-16	Control mechanism block unit
20	753611005	395715-22	R button unit
21	753047004	395715-23	R button
22	753147005	395715-24	R button spring
23	753046003	395715-25	R button supporter
24	753150001	395715-26	R button arm (2)
25	000103808	395711-06	Set screw 3 x 5
26	753061004	395715-27	Pattern selector index spring
27	000101105	395713-96	Set screw 3 x 4
28	652607002	395715-28	Feed regulating arm unit
29	650091001	395715-29	Feed shaft
30	625144002	395715-30	Feed shaft bushing (front)
31	650092002	395715-31	Feed shaft bushing (rear)
32	650175000	395715-32	Screw stopper plate
33	820387000	395715-33	Ring
34	000111108	395714-39	Hexagon socket screw 4 x 6
35	753033007	395715-34	Regulator spring

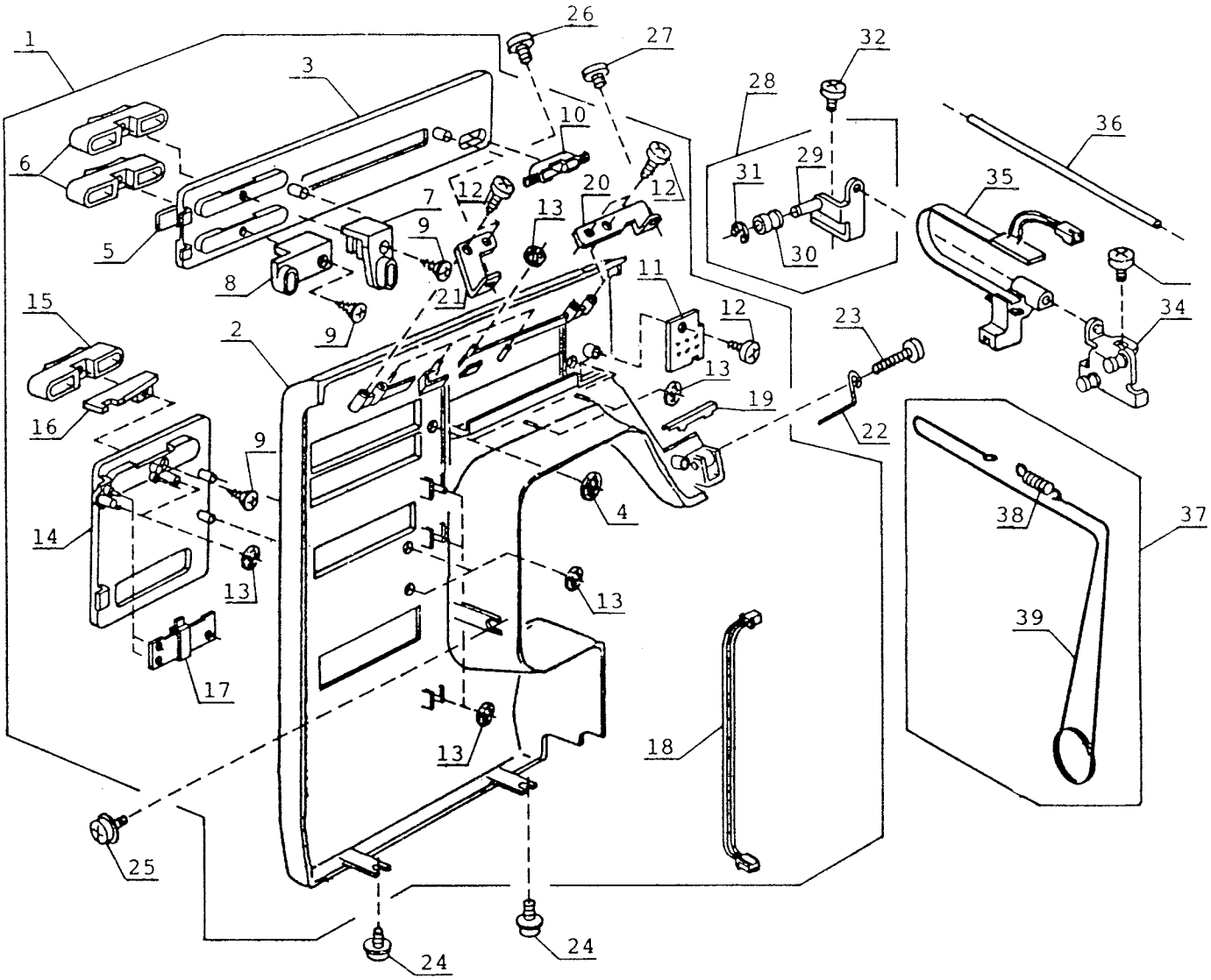
1
2
3
4
5
6
7
8
9
10
11
12
13
14
15
16
17
18
19
20
21
22
23
24
25
26
27
28
29
30
31
32
34
35
36
37
38
39

3006

No.	Part No.	Tavaro No.	Designation
1	753655001	395716-17	Front panel unit
2	753100028	395716-18	Front panel
3	753289005	395716-19	Pattern indication plate
4	000014007	395712-07	Snap ring CS-4
5	753340009	395716-20	Band plate
6	753103009	395715-39	Slide button
7	753104000	395715-40	Zigzag width adjusting slider
8	753105001	395715-41	Stitch length adjusting slider
9	000163105	395715-42	Tapping screw 2.3 x 5
10	753106002	395716-21	Up/down needle position button
11	753511004	395716-22	Circuit board UD unit
12	000120203	395713-65	Tapping screw 3 x 8 (B)
13	000014306	395710-49	Snap ring CS-3
14	753128701	395716-23	R button frame
15	753103009	395715-39	Slide button
16	753107003	395716-24	Slide piece
17	653507107	395716-25	Slide volume unit
18	753528004	395716-26	Junction cord unit
19	753108007	395716-27	Thread protecting plate
20	753108004	395715-46	Front panel retaining plate(front)
21	753109005	395715-47	Front panel retaining plate (rear)
22	753126008	395715-48	Arm thread guide
23	000093608	395715-49	Set screw 3.5 x 30
24	000115205	395710-41	TP screw 4 x 6
25	000115607	395715-50	TP screw 4 x 8
26	000081005	395710-42	Set screw 4 x 8
27	000101105	395713-96	Set screw 3 x 4
28	753616000	395715-51	Indicator guide holder unit (front)
29	753110009	395715-52	Indicator guide holder (front)
30	652099005	395715-53	Guide roller
31	000001207	395713-99	Spring E-2.5
32	000101404	395710-38	Set screw 4 x 6
34	753111000	395715-54	Indicator guide holder (rear)
35	753508008	395716-28	Flexible circuit board unit
36	753112001	395715-55	Indicator guide
37	753618002	395715-57	Indicator string unit
38	818033001	395715-58	Indicator string spring
39	753113002	395715-59	Indicator string
40	741032102	395710-48	" elna " mark

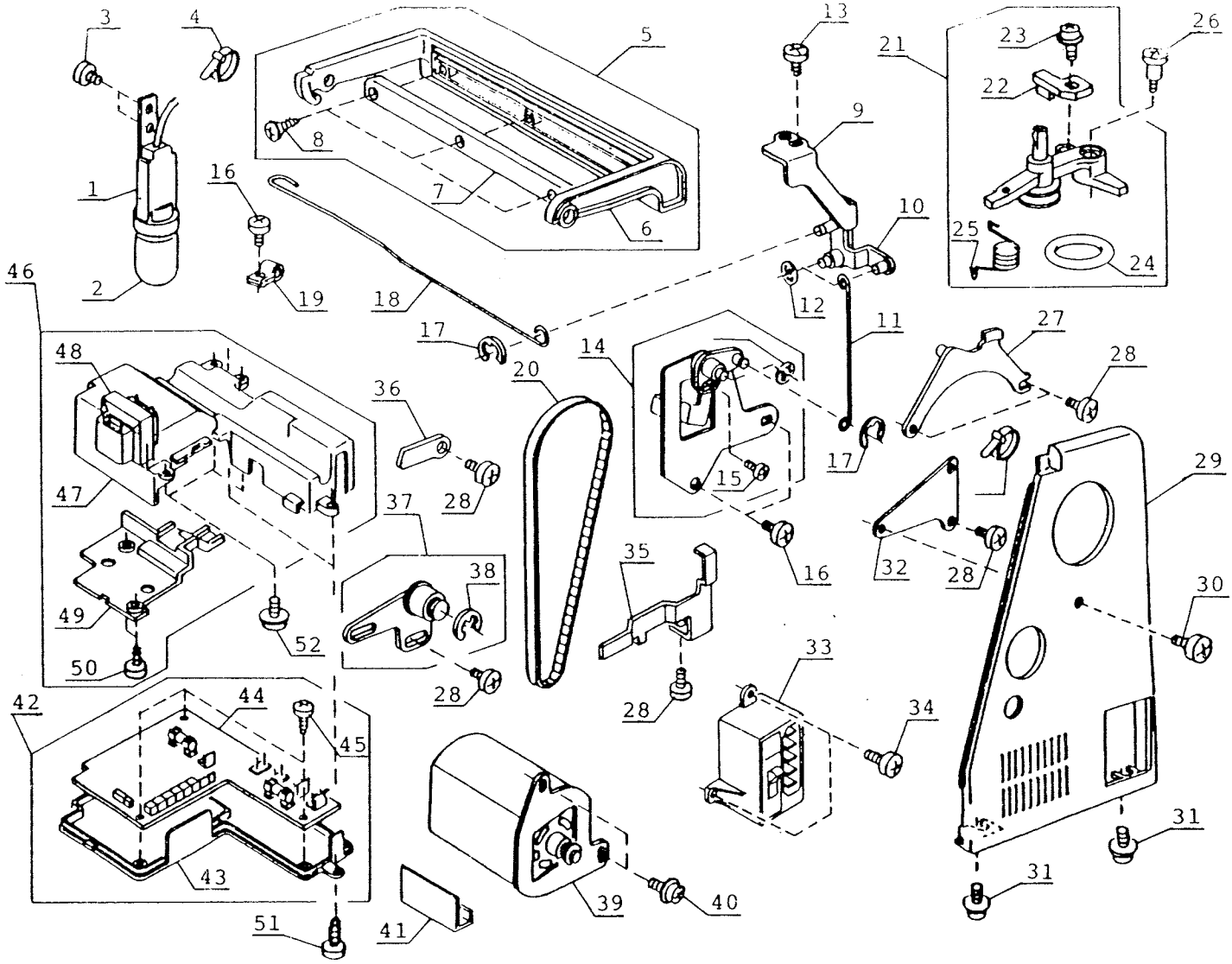
1
2
3
4
5
6
7
8
9
10
11
12
13
14
15
16
17
18
19
20
21
22
23
24
25
26
27
28
29
30
31
32
33
34
35
36
37
38
39
40
41
42
43
44
45
46
47
48
49
50
51
52

No.	Part No.	Tavaro No.	Designation
1	753520006	395716-29	Lamp socket unit (USA)
	753527003	395716-30	Lamp socket unit (Canada)
	826516101	395716-31	Lamp socket unit 230V
2	000008606	395719-43	Light bulb 120 V/15 W E12
	000009009	395710-04	Light bulb 230V/15 W BA15D
3	000101105	395713-96	Set screw 3 x 4
4	000053008	395711-18	Binder
5	753620007	395715-65	Carrying handle unit
6	753121003	395715-66	Carrying handle
7	753122004	395715-67	Carrying handle plate
8	000120502	395715-68	Tapping screw 3 x 8 (B)
9	753117006	395715-69	Drag rod link holder plate
10	753118007	395715-70	Drag rod link
11	753099001	395715-71	BH drag rod (2)
12	000014007	395712-07	Snap ring CS-4
13	810220003	395713-27	Set screw
14	753614008	395715-72	Step-up base unit
15	000101507	395715-73	Set screw 3.5 x 5
16	000101404	395710-38	Set screw 4 x 6
17	000002105	395711-03	Snap ring E-3
18	753098000	395715-74	BH drag rod
19	000126508	395716-32	Nylon clip SL-6N
20	650166008	395712-77	Timing belt
21	653633000	395716-33	Bobbin winder unit
22	653133005	395716-34	Switch pressing plate
23	000114709	395716-35	TP screw 3 x 6
24	365976007	395715-77	Rubber ring
25	823119008	395716-36	Bobbin winder frame spring
26	686063005	395715-79	Hinge screw
27	753120002	395715-80	Carrying handle supporter plate
28	000081005	395710-42	Set screw 4 x 8
29	753115004	395715-81	Belt cover
30	000101806	395715-82	Set screw 4 x 16
31	000115205	395710-41	TP screw 4 x 6
32	753116005	395715-83	Belt cover retaining plate
33	753509009	395716-37	Machine socket unit 120V
	753516009	395716-38	Machine socket unit 230V
34	000101703	395711-12	Set screw 4 x 12
35	753143001	395716-39	Cord guide
36	753200007	395716-40	Cord guide
37	753619003	395715-88	Idler unit
38	000002806	395711-34	Snap ring E-6
39	013990110	395716-41	Motor unit 120V
	023197110	395716-42	Motor unit 230V
40	000115504	395712-76	TP screw 5 x 10
41	753148006	395716-43	Protecting sheet
42	753621008	395716-44	Circuit board case unit 120V
	753627004	395716-45	Circuit board case unit 230V
43	753123005	395716-46	Circuit board case
44	753518001	395716-47	Circuit board B unit 120V
	753519002	395716-48	Circuit board B unit 230V
45	000107905	395716-49	Tapping screw 3 x 6 (B)
46	753622009	395716-50	Circuit board case cover unit 120V
	753628005	395716-55	Circuit board case cover unit 230V
47	753124006	395716-51	Circuit board case cover
48	688509004	395716-52	Transformer unit 120V
	688514002	395716-53	Transformer unit 230V
49	753144105	395716-54	Transformer cover
50	000107318	395713-70	Tapping screw 3 x 8 (B)
51	000076317	395710-35	Tapping screw 3 x 10
52	000115607	395715-50	TP screw 4 x 8

1

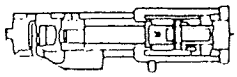

2

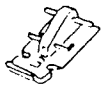

3

4

5

6

7

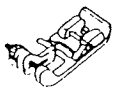

8

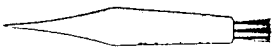

9

10

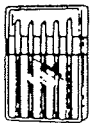

11

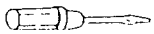

12

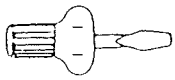

13

14

15

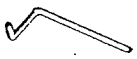

16

17

18

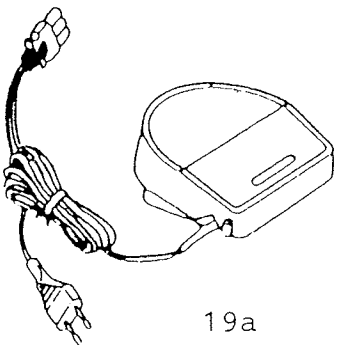

19a

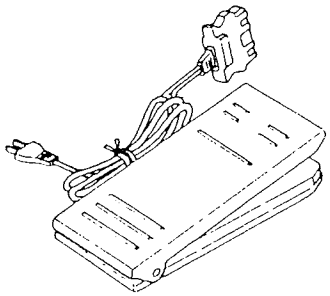

19c

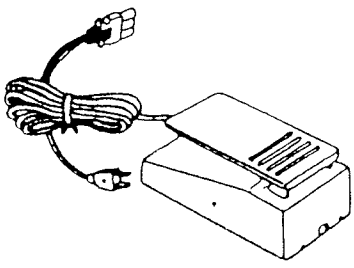

19b

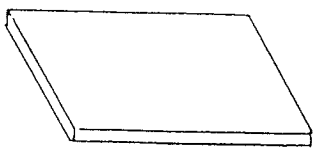

20

3002 - 3004 - 3006

No.	Part No.	Tavaro No.	Designation
1	825510032	395719-29	Zigzag foot
2	753801004	395719-30	BH foot
3	823803006	395719-31	Zipper foot
4	822804118	395719-32	Satin stitch foot
5		494430	Bobbin
6	820809014	395719-33	Hemmer foot
7	820804019	395719-34	Overedge foot
8	820817015	395719-35	Blind stitch foot
9	802424004	395719-36	Lint brush
10	647808009	395710-13	Seam ripper
11	540405026	395719-37	Needle case unit
12	647803004	395710-10	Screwdriver (small)
13	820832005	395710-09	Screwdriver (large)
14	822019509	395719-38	Spool holder (small)
15	822020503	395719-39	Spool holder (large)
16	802422002	395719-40	Quilter guide
17	102403109	395719-41	Felt
18	625031500	395719-42	Spool pin
19a	C-2040	395713-00	Foot controller 230V
19b	C-1008	395713-03	Foot controller 120V
19c	041971433	395713-05	Foot controller (electronic)
20	753813009	395705-10	Instruction manual Eng/Ger/Fr/It
	753815001	395706-19	Instruction manual Dan/Swe/Nor
*	990753001	395716-58	Carton box
*	990753002	395716-56	Styrofoam set
*	476701304	395719-50	Hard resin cover

* not illustrated

Part No.	Weight (g)	Page
1207	1	3,8,9,14,19
1609	1	4,7,15,18
1702	1	05,16
2105	1	6,7,10,11,17,18,20
2806	1	10,11,20
8606	6	20
8606	7	10
9009	7	11,20
13903	1	01,12
14007	1	3,8,9,10,11,14,19,20
14306	1	08,09,19
23009	1	03,14
30205	1	05,16
36201	1	5,16,16,17
36500	1	06,17
36706	1	05,16
53008	1	10,11,20
60857	1	03,14
61102	1	16
61319	1	01,12
62701	1	02,13
66727	1	02,13
66808	2	01,12
70506	1	04,15
70506	1	06,17
75604	1	01,11
76317	1	10,11,20
76502	1	02,13
78319	1	14,16
80901	3	02,13
81005	1	1,3,6,7,8,9,10,11,12,14,17,18,19,20
81119	1	02,13,14
93608	3	08,09,19
97302	1	01,12
101105	1	3,7,8,9,10,11,14,18,19,20
101208	1	11
101301	2	05,16
101404	1	1,3,4,6,7,8,9,10,11,14,15,16,17,18,19,20
101507	1	10,11,20
101703	1	1,3,10,11,12,14,20
101806	3	10,11,20
103509	1	04,15
103808	1	1,6,7,12,17,18
104304	1	03,14
104809	3	03,14
107204	2	06,17
107307	1	05,16
107318	1	02,13,20
107503	1	01,12
107905	1	20
111108	1	4,7,15,16,18
111201	1	4,5,6,7,15,16,17,18
111304	1	5,6,16,17
111500	1	04,15
114709	1	20
115009	1	07,18
115205	1	1,8,9,10,11,12,19,20
115504	1	10,11,20
115607	1	8,9,19,20
120203	1	2,8,9,13,19
120214	1	02,13
120502	1	10,11,20
121606	1	06,17
126106	1	10,11
126508	1	20
149002	1	02,13
160102	1	03,14
163105	1	08,09,19
170507	2	02,13
822658	10	04,15
12893119	600	10
12893212	600	10
13990110	600	20
23197110	600	20
41971433	620	21
102012004	1	04,15
102063000	1	05,16
102073003	1	05,16
102222009	1	04,15
102261103	1	1
102403109	1	21
102801008	6	04,15
365076007	1	10,11,20
366501102	12	02,13
532030003	1	06,17
532041007	2	05,16
540405026	7	21
614025002	1	06,17
625031500	1	21
625084003	1	03,14
625102008	1	06,17
625118007	8	06,17
625120105	5	06,17
625144002	8	07,18
625226009	8	04,15
627170003	1	03,14
627183009	3	05,16
627190009	10	06,17
627191000	2	06,17
627192001	1	06,17
627207000	1	06,17
627567001	2	01,12
627568002	5	05,16
627569106	6	01,12
630005006	5	02,13
647009002	2	01,12
647803004	4	21
647808009	4	21
650023002	1	06,17
650025004	1	02,13
650033005	22	04,15
650034006	2	04,15
650035007	5	04,15
650036008	1	04,15
650038000	20	04,15
650040005	1	04,15
650041006	1	04,15
650043008	1	03,14
650060001	36	05,16
650062003	10	05,16
650063004	72	05,16
650064500	52	05,16
650065006	1	05,16
650066007	1	05,16
650067503	16	05,16
650068009	3	05,16
650070509	2	05,16
650071005	8	05,16
650074008	1	06,17
650076000	27	06,17
650078002	16	06,17
650079003	17	06,17
650085002	1	06,17

Part No.	Weight (g)	Page
650091001	27	07,18
650092002	7	07,18
650094004	13	06,17
650095005	22	06,17
650096006	67	06,17
650097007	5	06,17
650098008	1	06,17
650099009	1	06,17
650100004	9	04,15
650101005	5	06,17
650156005	19	07,18
650162406	5	07,18
650166008	5	10,11,20
650171006	2	06,17
650172007	2	06,17
650174009	1	05,16
650175000	1	07,18
650602001	20	01,12
650603002	20	01,12
650609503	70	05,16
650612004	37	06,17
650614006	170	06,17
652005107	53	01,12
652037005	2	03,14
652038006	1	03,14
652039007	1	03,14
652042003	3	04,15
652099005	2	08,09,19
652109009	10	06,17
652137006	2	03,14
652145007	5	04,15
652146008	10	04,15
652515002	53	06,17
652607002	10	07,18
652620001	121	06,17
652623004	150	06,17
653133005	1	20
653507107	5	19
653508005	15	10,11
653633000	25	20
656159006	1	06,17
673062004	11	05,16
685042005	1	03,14
686010007	4	01,12
686016209	16	02,13
686027007	3	04,15
686028008	3	04,15
686035008	1	06,17
686036102	5	06,17
686059008	16	03,14
686063005	4	10,11,20
686074009	18	04,15
686085003	2	04,15
686504003	25	10
686508007	25	11
686611004	10	04,15
686612005	35	04,15
686613006	150	06,17
686618001	30	07,18
686623009	375	05,16
687008005	18	11
687009006	24	11
687010000	3	11
687013003	18	10
687022005	4	02,13
687502107	80	11
687503005	99	11
687504202	80	10
687505007	127	10
687602005	127	11
687603006	140	10
688003003	1	07,18
688004004	6	07,18
688509004	126	20
688514002	126	20
693093006	1	02,13
724024005	1	02,13
724025006	1	02,13
730501000	2	02,13
735002001	2	01,12
735002007	1	01,12
735003002	2	1
735514104	13	16
741032102	1	08,09,19
753003002	161	01,12
753005000	4	01,12
753006001	82	01,12
753007002	85	01,12
753012000	166	02,13
753014002	2	02,13
753015106	160	02,13
753017500	91	02,13
753017603	91	2
753019007	5	03,14
753022003	75	03,14
753023004	5	03,14
753024005	5	03,14
753026007	13	03,14
753027008	1	03,14
753028009	2	14
753029000	1	03,14
753033007	2	07,18
753046003	28	07,18
753047004	6	07,18
753061004	2	07,18
753082104	10	07,18
753083002	26	07,18
753084003	11	07,18
753098000	4	10,11,20
753099001	1	10,11,20
753100023	3	08,09
753100028	260	19
753103009	2	08,09
753104000	2	08,09,19
753105001	2	08,09,19
753106002	1	19
753107003	1	19
753108004	6	08,09,19
753108007	3	19
753109005	6	08,09,19
753110009	5	08,09,19
753111000	6	08,09,19
753112001	7	08,09,19
753113002	2	08,09,19
753115004	2	10,11,20
753116005	20	10,11,20
753117006	20	10,11,20
753118007	7	10,11,20
753120002	21	10,11,20
753121003	65	10,11,20
753122004	85	10,11,20
753123005	40	20

Part No.	Weight (g)	Page
753124006	73	20
753125007	3	08,09
753126008	1	08,09,19
753128701	20	19
753129001	2	02,13
753131006	2	16
753132007	20	16
753133101	4	16
753134009	2	14
753143001	16	20
753144105	10	20
753147005	1	07,18
753148006	1	20
753150001	6	07,18
753156605	20	08,09
753159000	30	11
753200007	16	20
753201008	14	07,18
753202009	13	07,18
753203000	10	07,18
753237106	9	02,13
753238004	1	13
753238107	1	2
753238200	1	2
753240102	5	9
753240205	5	8
753241000	25	9
753241103	25	8
753242001	9	2
753289005	25	19
753340009	2	19
753501001	73	01,12
753502002	5	02,13
753503003	105	03,14
753504004	9	14
753505005	7	16
753508008	6	19
753509009	79	20
753511004	2	19
753512005	6	08,09
753516009	79	20
753518001	75	20
753519002	75	20
753520006	45	20
753526002	171	01,12
753527003	45	20
753528004	5	19
753529005	5	08,09
753601002	57	01,12
753603004	75	01,12
753604407	360	13
753604603	360	2
753604706	360	2
753605501	174	13
753605604	174	2
753605707	174	2
753606007	105	2
753606708	105	13
753606904	105	2
753610004	1	18
753611005	39	07,18
753614008	12	10,11,20
753616000	6	08,09,19
753618002	60	08,09,19
753619003	10	10,11,20
753620007	160	10,11,20
753621008	112	20
753622009	230	20
753623000	1	7
753625002	120	03,14
753626003	7	3
753627004	112	20
753629006	7	03,14
753630000	1	7
753647000	34	07,18
753655001	320	19
753656002	320	9
753656105	320	8
753801004	1	21
753813009	360	21
753815001	300	21
802422002	1	21
802424004	2	21
810220003	1	10, 11, 12, 20
810388000	1	10,11
815023009	5	04,15
818033001	2	08,09,19
820123006	7	06,17
820124007	1	06,17
820125008	1	06,17
820161006	1	06,17
820374004	1	1, 6, 12, 17
820387000	6	07,18
820390109	2	01,12
820511005	18	05,16
820804019	1	21
820809014	1	21
820817015	1	21
820832005	10	21
822011109	4	01,12
822016403	5	02,13
822017002	1	02,13
822018003	1	02,13
822019509	1	21
822020307	5	02,13
822020503	2	21
822021009	1	02,13
822065005	2	04,15
822072005	6	04,15
822314002	1	01,12
822510000	17	03,14
822525008	16	04,15
822532008	4	02,13
822804118	1	21
823119008	1	20
823803006	1	21
824009007	3	04,15
825014008	1	01,12
825015010	1	01,12
825016000	1	01,12
825017001	1	01,12
825018013	4	01,12
825510032	8	04,15,21
826516101	45	20
990753001	700	21
990753002	220	21
C-1008	570	21
C-2040	570	21